OMS, OMT and OMV Orbital Motors

Technical Information

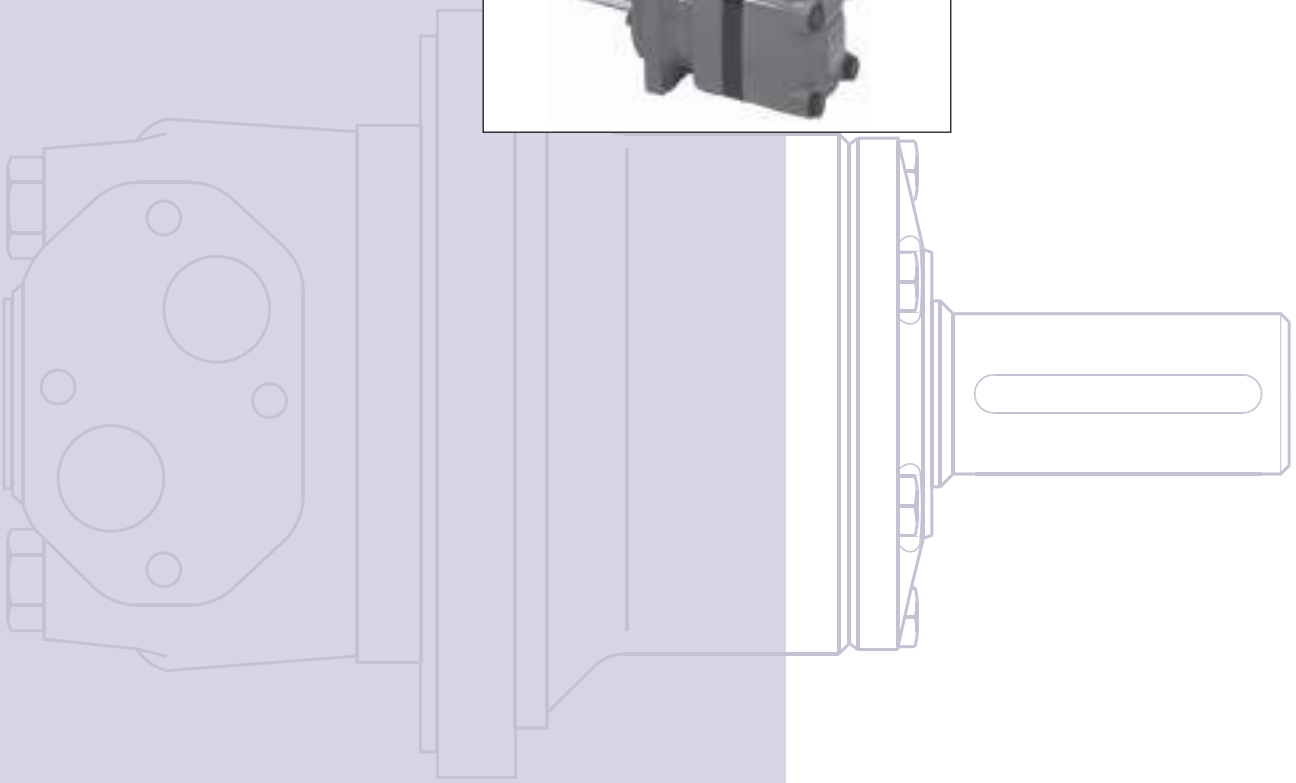

Revision History

Table of Revisions

Date	Page	Changed	Rev
Nov 2009	67	conversions, and layout adjusted	ED
Nov 2010	68	Dimensions changed	EF

F300 540., F300 030

A Wide Range of Orbital Motors

Sauer-Danfoss is a world leader within production of low speed orbital motors with high torque. We can offer more than 1600 different orbital motors, categorised in types, variants and sizes (incl. different shaft versions).
The motors vary in size (rated displacement) from 8 cm^3 [0.50 in^3] to 800 cm^3 [48.9 in^3] per revolution.
Speeds range up to approx. 2500 min^{-1} (rpm) for the smallest type and up to approx 600 min^{-1} (rpm) for the largest type.
Maximum operating torques vary from 13 Nm [115 lbf·in] to 2700 Nm [24.000 lbf·in] (peak) and maximum outputs are from 2.0 kW [2.7 hp] to 70 kW [95 hp].

Characteristic features:

- Smooth running over the entire speed range
- Constant operating torque over a wide speed range
- High starting torque
- High return pressure without the use of drain line (High pressure shaft seal)
- High efficiency
- Long life under extreme operating conditions
- Robust and compact design
- High radial and axial bearing capacity
- For applications in both open and closed loop hydraulic systems
- Suitable for a wide variety of hydraulics fluids

Frontpage: F300 211, F300 212, F300 351, F300 145, 151-1976

The programme is characterised by technical features appealing to a large number of applications and a part of the programme is characterised by motors that can be adapted to a given application. Adaptions comprise the following variants among others:

- Motors with corrosion resistant parts
- Wheel motors with recessed mounting flange
- OMP, OMR- motors with needle bearing
- OMR motor in low leakage version
- OMR motors in a super low leakage version
- Short motors without bearings
- Ultra short motors
- Motors with integrated positive holding brake
- Motors with integrated negative holding brake
- Motors with integrated flushing valve
- Motors with speed sensor
- Motors with tacho connection
- All motors are available with black finish paint

Planetary gears

Sauer-Danfoss complements the motor range with a complete programme of planetary gears adapted to suit. The combination of motors and gears makes it possible to obtain smooth running at fractional speeds and with torques up to 650.000 Nm (5.800.000 lbf·in).

The Sauer–Danfoss orbital motors are used in the following application areas:

- Construction equipment
- Agricultural equipment
- Material handling & Lifting equipment
- Forestry equipment
- Lawn and turf equipment
- Special purpose
- Machine tools and stationary equipment
- Marine equipment

Survey of Literature with Technical Data on Sauer-Danfoss Orbital Motors

Detailed data on all Sauer-Danfoss motors can be found in our motor catalogue, which is divided into 5 individual subcatalogues:

- General information on Sauer-Danfoss orbital motors: function, use, selection of orbital motor, hydraulic systems, etc.
- Technical data on small motors: OML and OMM
- Technical data on medium sized motors: OMP, OMR, OMH and OMEW
- Technical data on medium sized motors: DH and DS
- Technical data on large motors: OMS, OMT and OMV
- Technical data on large motors: TMT

A general survey brochure on Sauer-Danfoss orbital motors gives a quick motor reference based on power, torque, speed and capabilities.

OMS, OMT and OMV Speed, Torque and Output

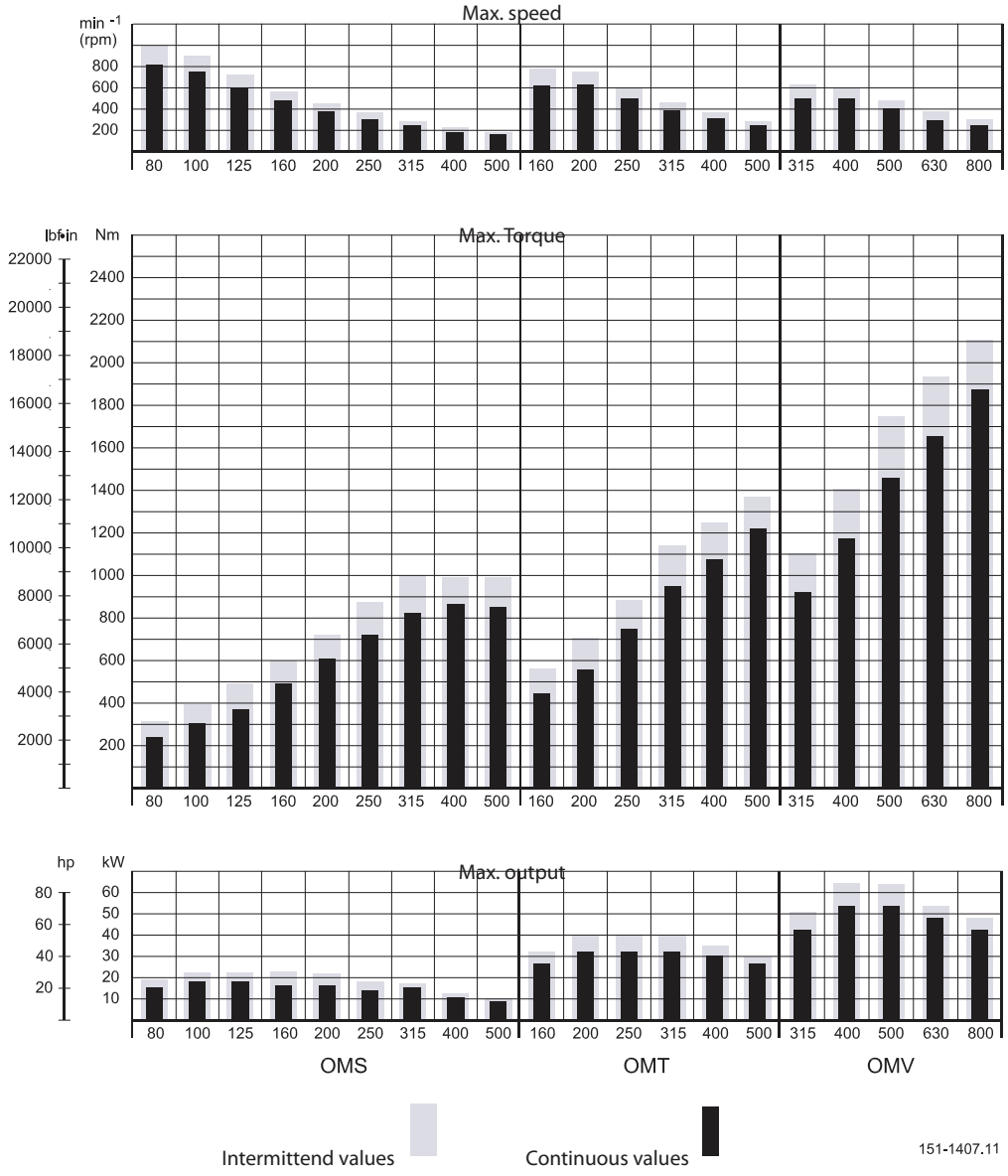

The bar diagrams above are useful for a quick selection of relevant motor size for the application. The final motor size can be determined by using the function diagram for each motor size.

- OMS can be found on pages 14-18
- OMT can be found on pages 42-44
- OMV can be found on pages 65-67

The function diagrams are based on actual tests on a representative number of motors from our production. The diagrams apply to a return pressure between 5 and 10 bar [75 and 150 psi] when using mineral based hydraulic oil with a viscosity of 35 mm^2/s [165 SUS] and a temperature of 50°C [120°F]. For further explanation concerning how to read and use the function diagrams, please consult the paragraph "Selection of motor size" in the technical information "General Orbital motors" 520L0232.

OMT
Versions

Mounting flange	Shaft	Port size	European version	US version	Drain connection	Check valve	Low pressure release	High pressure release	Main type designation
Standard flange	Cyl. 40 mm	G 3/4	❍		Yes	Yes			OMT
	Cyl. 1.5 in	1 1/16-12 UN		❍	Yes	Yes			OMT
	Splined 1.5 in	G 3/4	❍		Yes	Yes			OMT
		1 1/16-12 UN		❍	Yes	Yes			OMT
	Tapered 45 mm	G 3/4	❍		Yes	Yes			OMT
	Tapered 1.75 in	1 1/16-12 UN		❍	Yes	Yes			OMT
	P.t.o.	G 3/4	❍		Yes	Yes			OMT
Wheel	Cyl. 40 mm	G 3/4	❍		Yes	Yes			OMTW
	Tapered 45 mm	G 3/4	❍		Yes	Yes			OMTW
	Tapered 1.75 in	1 1/16-12 UN		❍	Yes	Yes			OMTW
Brake-wheel	Wheel bolt flange	G 3/4	❍		Yes	No	❍		OMT FX
	Thread hole flange	G 3/4	❍		Yes	No	❍		OMT FX
Brake-standard	Cyl. 40 mm	G 3/4	❍		Yes	No	❍		OMT FL
	Splined 1.5 in	G 3/4	❍		Yes	No	❍		OMT FL
	Cyl. 40 mm	G 3/4	❍		Yes	No		❍	OMT FH
	Splined 1.5 in	G 3/4	❍		Yes	No		❍	OMT FH
Short	No output shaft	G 3/4	❍		Yes	Yes			OMTS

Function diagram - see page : →

Features available (options) :
Speed sensor
Motor with tacho connection
Viton shaft seal
Painted
Ultra short

Code Numbers

Code Numbers	Displacement [cm³]						Technical data – Page	Shaft loads – Page	Dimensions – Page
	160	200	250	315	400	500			
151B	3000	3001	3002	3003	3004	3005	36	40	49
151B	2050	2051	2052	2053	2054	2055	36	40	50
151B	3006	3007	3008	3009	3010	3011	36	40	49
151B	2056	2057	2058	2059	2060	2061	36	40	50
151B	3012	3013	3014	3015	3016	3017	36	40	49
151B	2062	2063	2064	2065	2066	2067	36	40	50
151B	3018	3019	3020	3021	3022	3023	36	40	49
151B	3024	3025	3026	3027	3028	3029	36	40	51
151B	3030	3031	3032	3033	3034	3035	36	40	51
151B	2080	2081	2082	2083	2084	2085	36	40	52
151B	3207	3208	3209	3210	3211	3212	36	41	53
151B	3200	3201	3202	3203	3204	3205	36	41	53
151B	4000	4001	4002	4003	4004	4005	36	41	54
151B	4007	4008	4009	4010	4011	4012	36	41	54
151B	4021	4022	4023	4024	4025	4026	36	41	54
151B	4028	4029	4030	4031	4032	4033	36	41	54
151B	3036	3037	3038	3039	3040	3041	36	-	55
	42	42	43	43	44	44			

Ordering

Add the four digit prefix "151B" to the four digit numbers from the chart for complete code number.

Example:
151B3002 for an OMT 250 with standard flange, cyl. 40 mm shaft and port size G 3/4.

Orders will not be accepted without the four digit prefix.

Technical data
for OMT, OMTW, OMTS, OMT FX OMT FL and OMT FH

Type			OMT OMTW OMTS OMT FX OMT FL OMT FH	OMT OMTW OMTS OMT FX OMT FL OMT FH	OMT OMTW OMTS OMT FX OMT FL OMT FH	OMT OMTW OMTS OMT FX OMT FL OMT FH	OMT OMTW OMTS OMT FX OMT FL OMT FH	OMT OMTW OMTS OMT FX OMT FL OMT FH
Motor size			**160**	**200**	**250**	**315**	**400**	**500**
Geometric displacement	cm^3 [in^3]		161.1 [9.83]	201.4 [12.29]	251.8 [15.37]	326.3 [19.91]	410.9 [25.07]	523.6 [31.95]
Max. speed	min-1 [rpm]	cont.	625	625	500	380	305	240
		int[1)]	780	750	600	460	365	285
Max. torque	Nm [lbf·in]	cont.	470 [4160]	590 [5220]	730 [6460]	950 [8410]	1080 [9560]	1220 [10800]
		int.[1)]	560 [4960]	710 [6280]	880 [7790]	1140 [10090]	1260 [11150]	1370 [12130]
Max. output	kW [hp]	cont.	26.5 [35.5]	33.5 [44.9]	33.5 [44.9]	33.5 [44.9]	30.0 [40.2]	26.5 [35.5]
		int.[1)]	32.0 [42.9]	40.0 [53.6]	40.0 [53.6]	40.0 [53.6]	35.0 [46.9]	30.0 [40.2]
Max. pressure drop	bar [psi]	cont.	200 [2900]	200 [2900]	200 [2900]	200 [2900]	180 [2610]	160 [2320]
		int.[1)]	240 [3480]	240 [3480]	240 [3480]	240 [3480]	210 [3050]	180 [2610]
		peak[2)]	280 [4060]	280 [4060]	280 [4060]	280 [4060]	240 [3480]	210 [3050]
Max. oil flow	l/min [USgal/min]	cont.	100 [26.4]	125 [33.0]	125 [33.0]	125 [33.0]	125 [33.0]	125 [33.0]
		int.[1)]	125 [33.0]	150 [39.6]	150 [39.6]	150 [39.6]	150 [39.6]	150 [39.6]
Max. starting pressure with unloaded shaft	bar [psi]		10 [145]	10 [145]	10 [145]	10 [145]	10 [145]	10 [145]
Min. starting torque	at max. press. drop cont. Nm [lbf·in]		340 [3010]	430 [3810]	530 [4690]	740 [6550]	840 [7430]	950 [8410]
	at max. press. drop int.[1)] Nm [lbf·in]		410 [3630]	520 [4600]	630 [5580]	890 [7880]	970 [8590]	1060 [9380]

1) Intermittent operation: the permissible values may occur for max. 10% of every minute.
2) Peak load: the permissible values may occur for max. 1% of every minute.

For max. permissible combination of flow and pressure, see function diagram for actual motor.

Technical data
for OMT, OMTW, OMTS, OMT FX OMT FL and OMT FH

Type			Max. inlet pressure	Max. return pressure with drain line
OMT, OMTW, OMTS, OMT FX, OMT FL, OMT FH	bar [psi]	cont.	210 [3050]	140 [2030]
	bar [psi]	int.[1]	250 [3630]	175 [2540]
	bar [psi]	peak[2]	300 [4350]	210 [3050]

Brake motors

Type	Max. presssure in drain line[3]	Holding torque[4]	Brake-release pressure[3]	Max pressure in brake line
OMT FX, OMT FL	5 bar [70 psi]	1200 Nm [10620 lbf·in]	12 bar [170 psi]	30 bar [440 psi]
OMT FH	5 bar [70 psi]	1200 Nm [10620 lbf·in]	30 bar [440 psi]	280 bar [4060 psi]

1) Intermittent operation: the permissible values may occur for max. 10% of every minute.
2) Peak load: The permissible values may occur for max. 1% of every minute.
3) Brake motors must always have a drain line. The brake-release pressure is the difference between the pressure in the brake line and the pressure in the drain line.
4) For the supply of motors with holding torques higher than those stated, please contact the Sauer-Danfoss Sales Organization.

For max. permissible combination of flow and pressure, see function diagram for actual motor.

Max. Permissible Shaft Seal Pressure

OMT with check valves and without use of drain connection:
The pressure on the shaft seal never exceeds the pressure in the return line

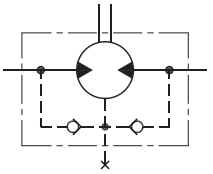

151-320.10

OMT with check valves and with drain connection:
The shaft seal pressure equals the pressure on the drain line.

OMT FX, OMT FL and OMT FH must always be fitted with drain line.
Max. pressure in drain line is 5 bar [75 psi]

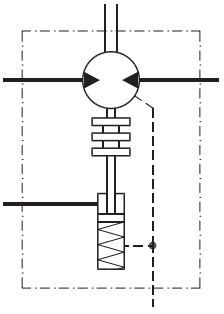

151-1405.10

Max. return pressure without drain line or max. pressure in the drain line

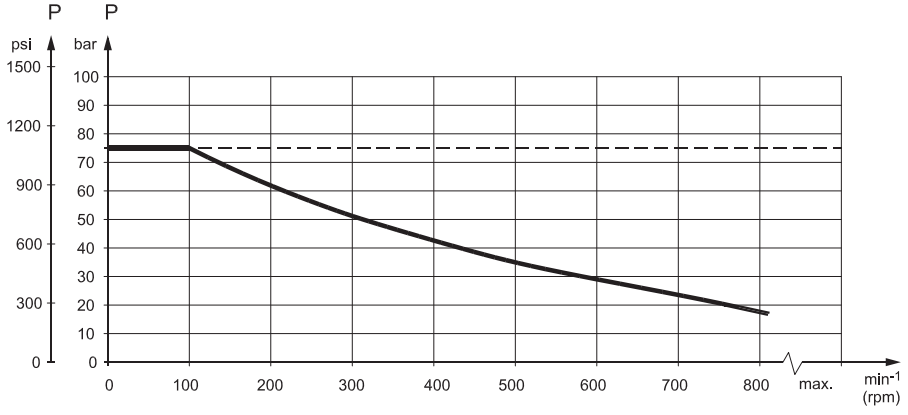

151-1674.10

– – – – Intermittent operation: the permissible values may occur for max. 10% of every minute.

——— Continuous operation

Pressure Drop in Motor

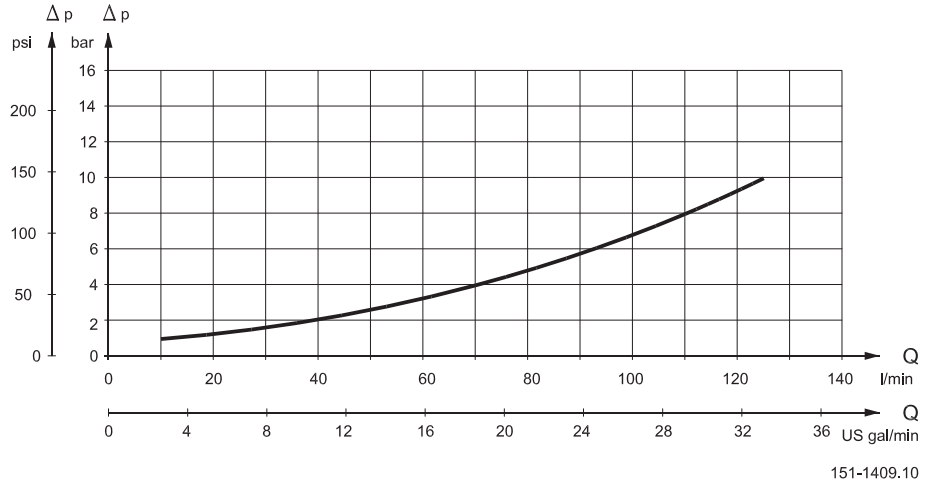

The curve applies to an unloaded motor shaft and an oil viscosity of 35 mm²/s [165 SUS]

Oil Flow in Drain Line

The table shows the max. oil flow in the drain line at a return pressure less than 5-10 bar [75-150 psi].

Pressure drop bar [psi]	Viscosity mm²/s [SUS]	Oil flow in drain line l/min [US gal/min]
140 [2030]	20 [100]	2.5 [0.66]
	35 [165]	1.5 [0.40]
210 [3050]	20 [100]	5.0 [1.32]
	35 [165]	3.0 [0.79]

Direction of Shaft Rotation

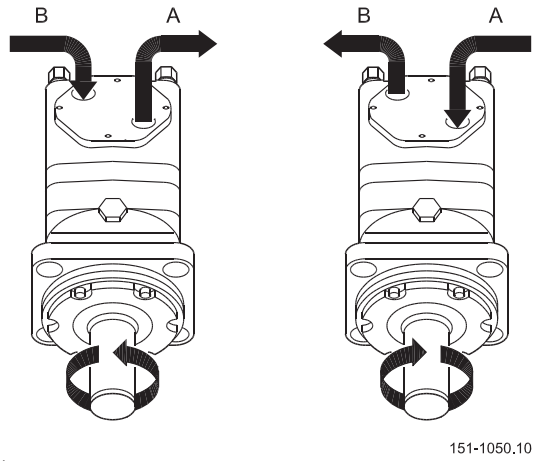

Permissible Shaft Loads for OMT

Mounting flange:
Standard

Shaft:
All shaft types

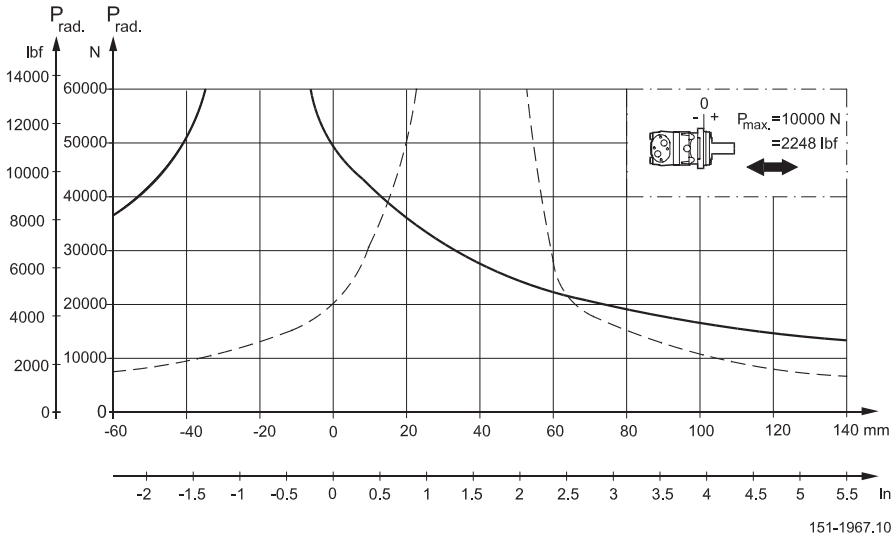

Mounting flange:
Wheel

Shaft:
All shaft types

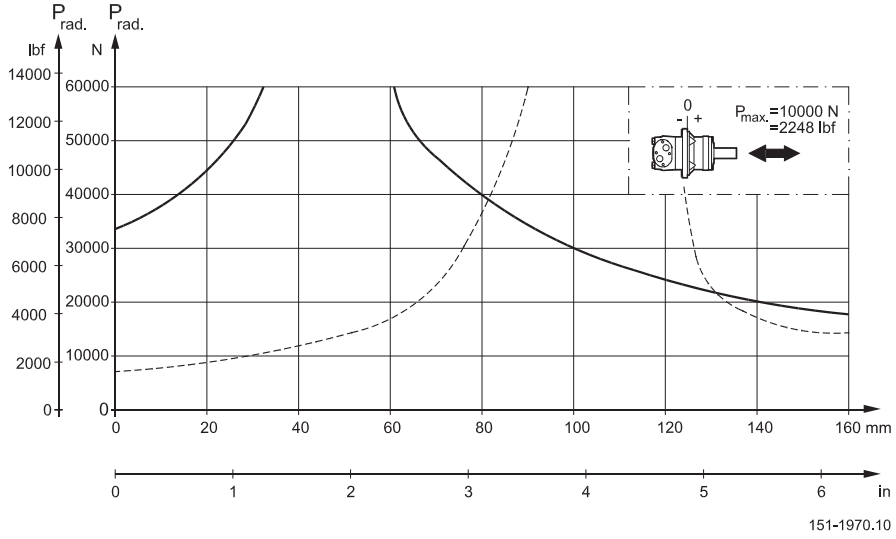

The output shaft runs in tapered roller bearings that permit high axial and radial forces. The permissible radial load on the shaft is shown for an axial load of 0 N as a function of the distance from the mounting flange to the point of load application.
The curve is based on B10 bearing life (2000 hours or 12,000,000 shaft revolutions at 100 min^{-1}) at rated output torque, when mineral-based hydraulic oil with a sufficient content of anti-wear additives, is used.
For 3,000,000 shaft revolutions or 500 hours – increase these shaft loads with 52%.
The dash curve shows max. radial shaft load. Any shaft load exceeding the values shown in the curve will involve a risk of breakage.
Bearing life calculations can be made using the explanation and formula provided in the chapter "Bearing dimensioning" in the technical information "General Orbital motors" 520L0232.

Permissible Shaft Loads for OMT

Mounting flange:
Brake-wheel

Shaft:
All shaft types

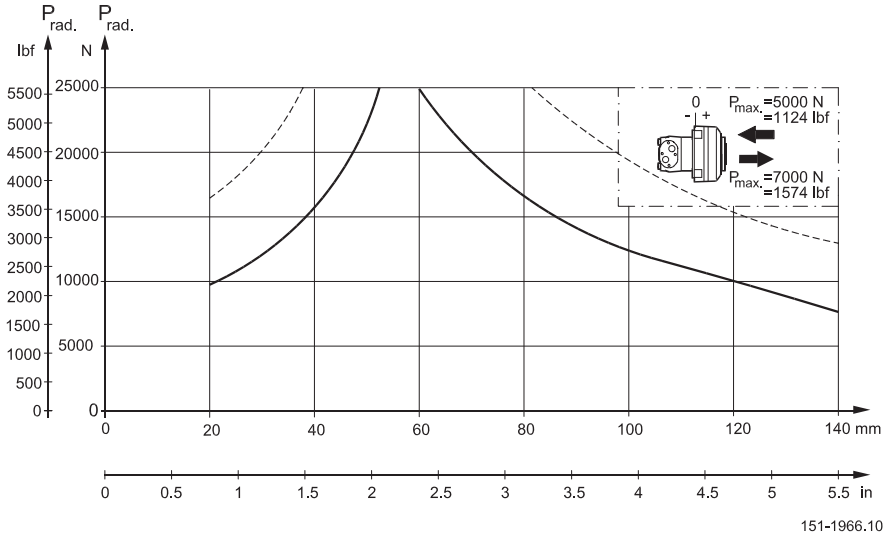

Mounting flange:
Brake-standard

Shaft:
All shaft types

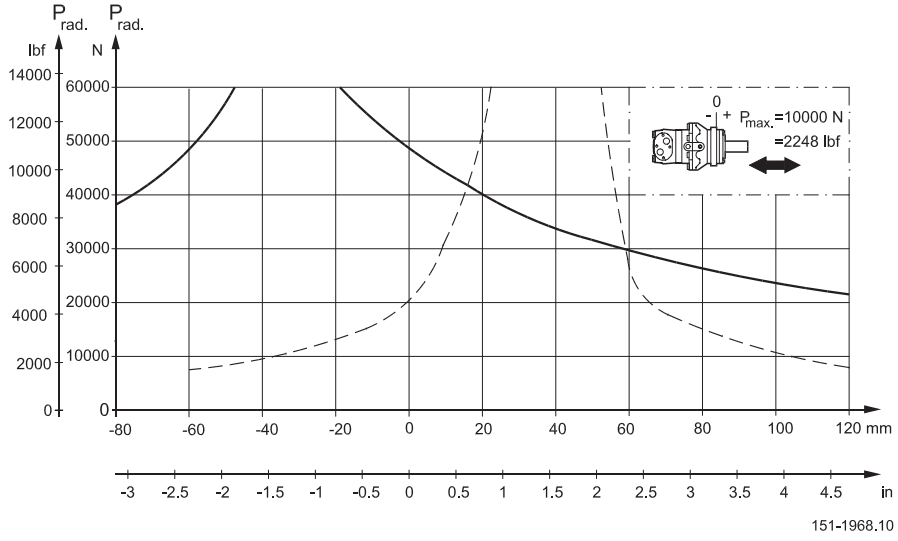

The output shaft runs in tapered roller bearings that permit high axial and radial forces. The permissible radial load on the shaft is shown for an axial load of 0 N as a function of the distance from the mounting flange to the point of load application.
The curve is based on B10 bearing life (2000 hours or 12,000,000 shaft revolutions at 100 min^{-1}) at rated output torque, when mineral-based hydraulic oil with a sufficient content of anti-wear additives, is used.
For 3,000,000 shaft revolutions or 500 hours – increase these shaft loads with 52%.
The dash curve shows max. radial shaft load. Any shaft load exceeding the values shown in the curve will involve a risk of breakage.
Bearing life calculations can be made using the explanation and formula provided in the chapter "Bearing dimensioning" in the technical information "General Orbital motors" 520L0232.

Function Diagrams

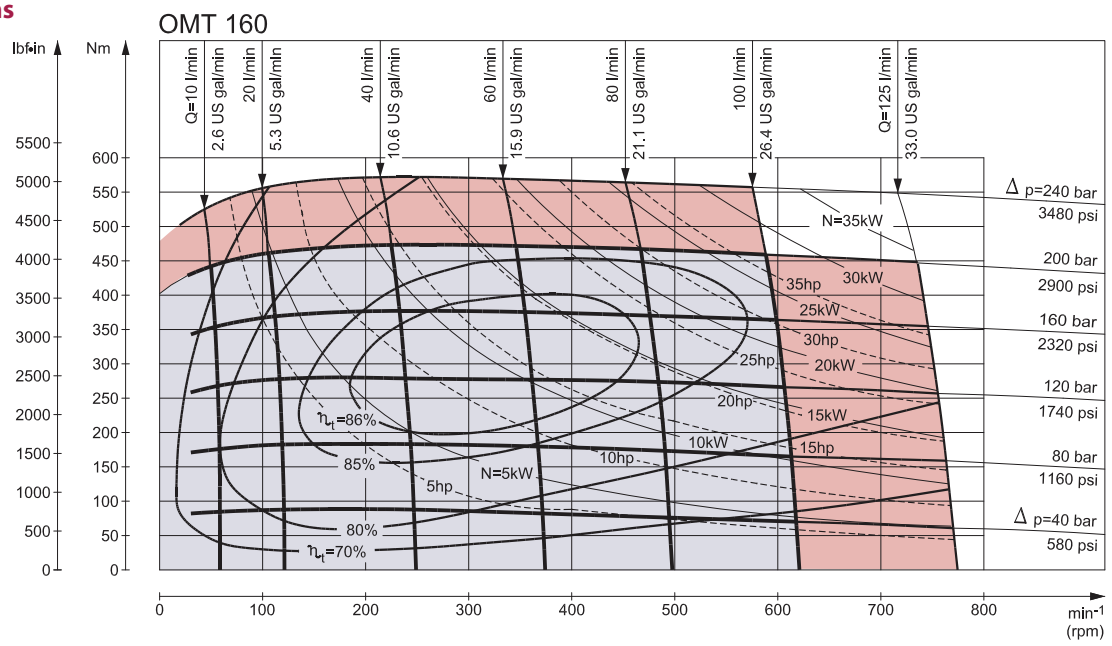

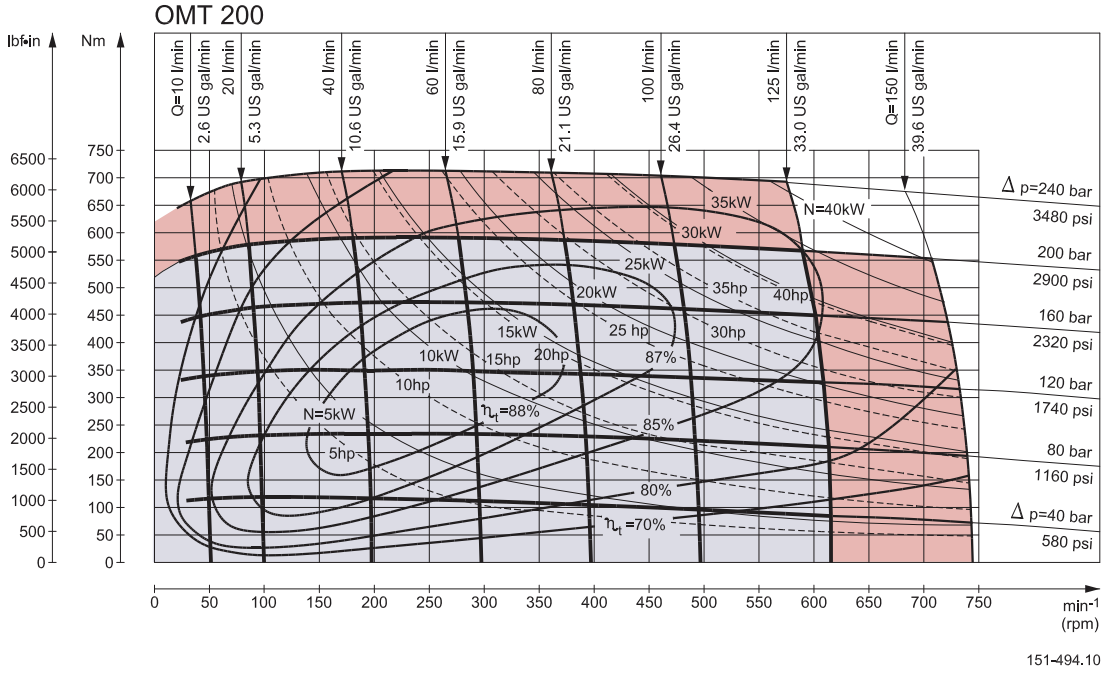

Explanation of function diagram use, basis and conditions can be found on page 5.

- Continuous range
- Intermittent range (max. 10% operation every minute)

Intermittent pressure drop and oil flow must not occur simultaneously.

Function Diagrams

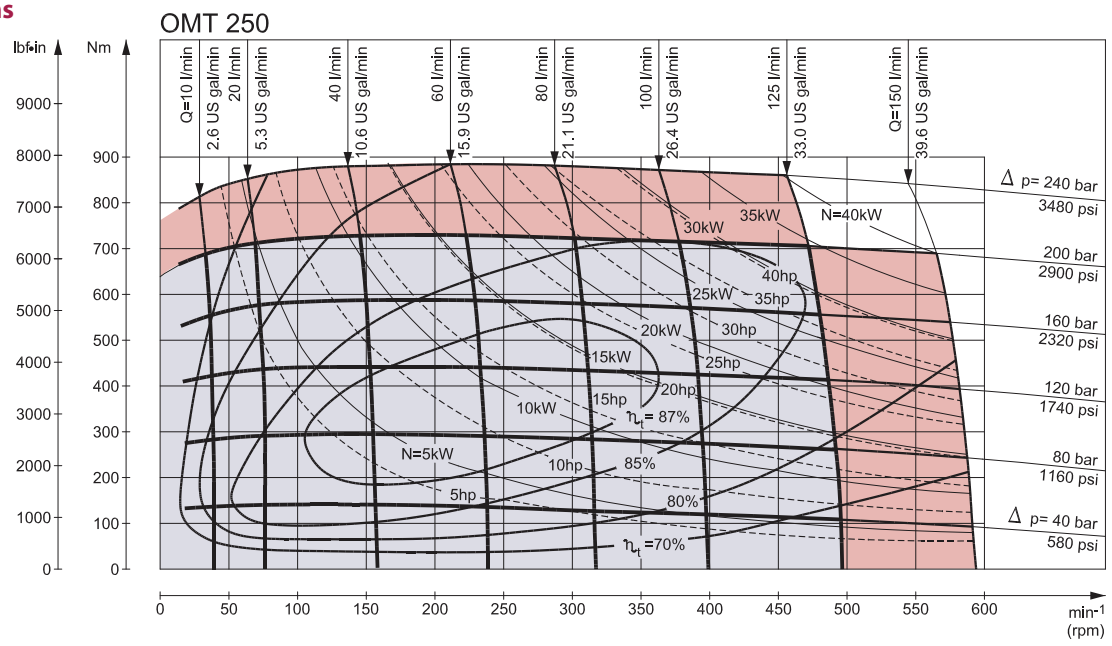

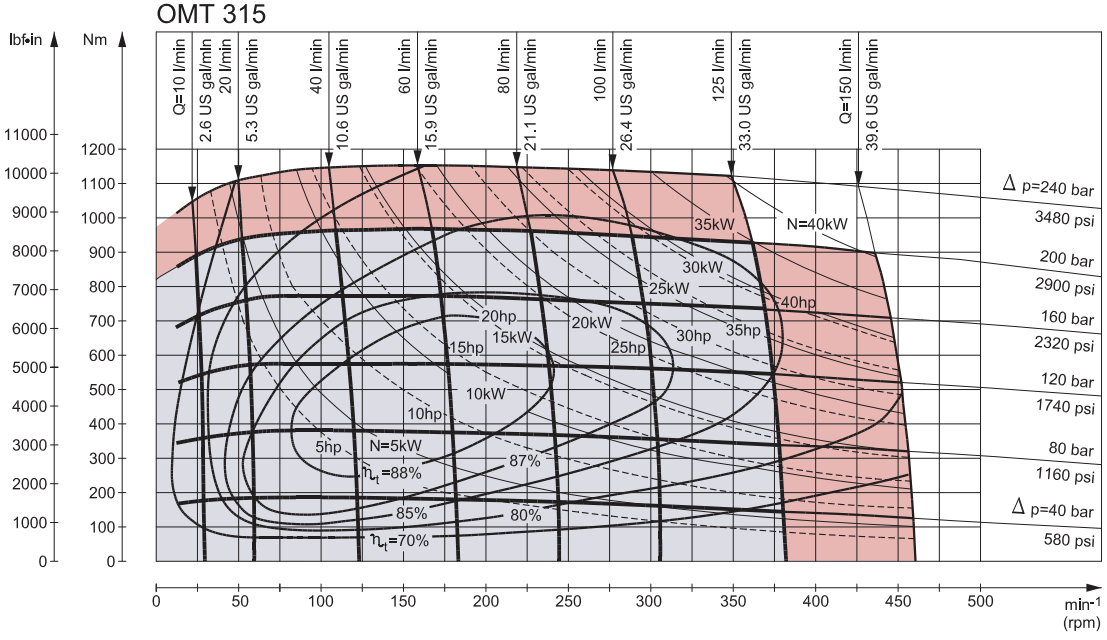

Explanation of function diagram use, basis and conditions can be found on page 5.

- Continuous range
- Intermittent range (max. 10% operation every minute)

Intermittent pressure drop and oil flow must not occur simultaneously.

Function Diagrams

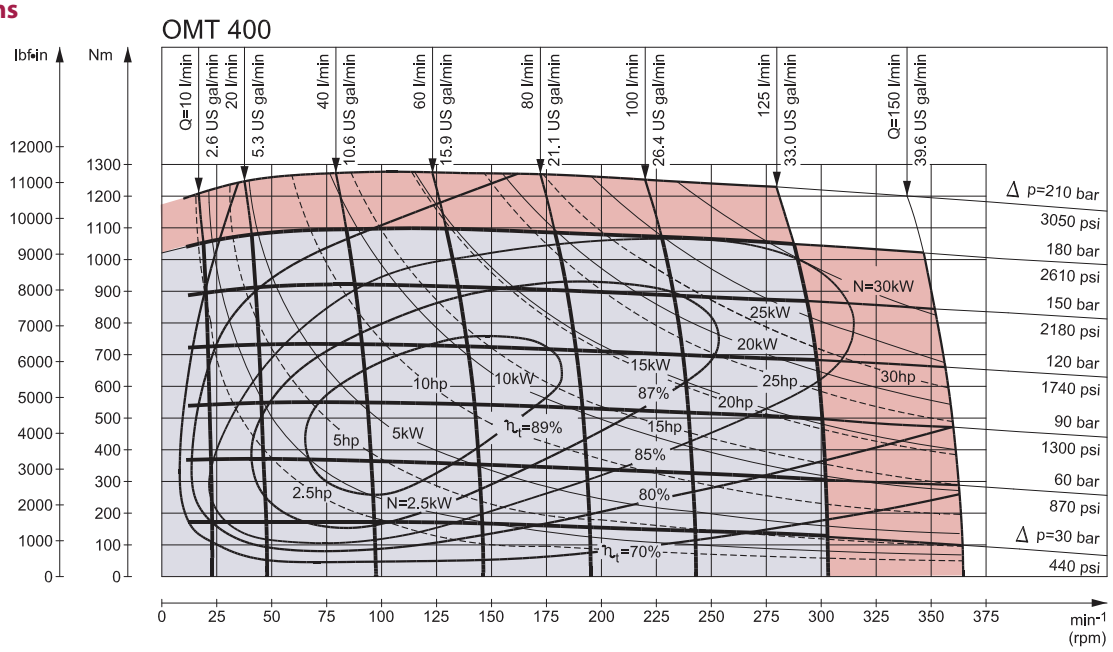

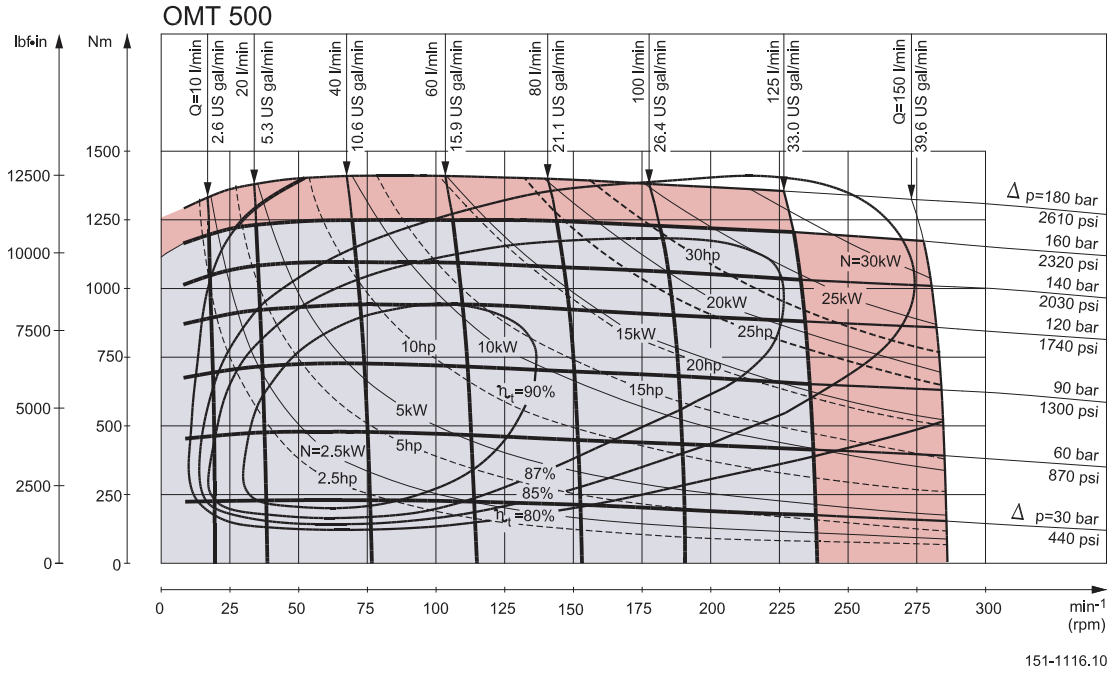

Explanation of function diagram use, basis and conditions can be found on page 5.

- Continuous range
- Intermittent range (max. 10% operation every minute)

Intermittent pressure drop and oil flow must not occur simultaneously.

Shaft Version

A: Cylindrical 40 mm shaft
C: Parallel key
A12 × 8 × 70
DIN 6885
Keyway deviates from standard

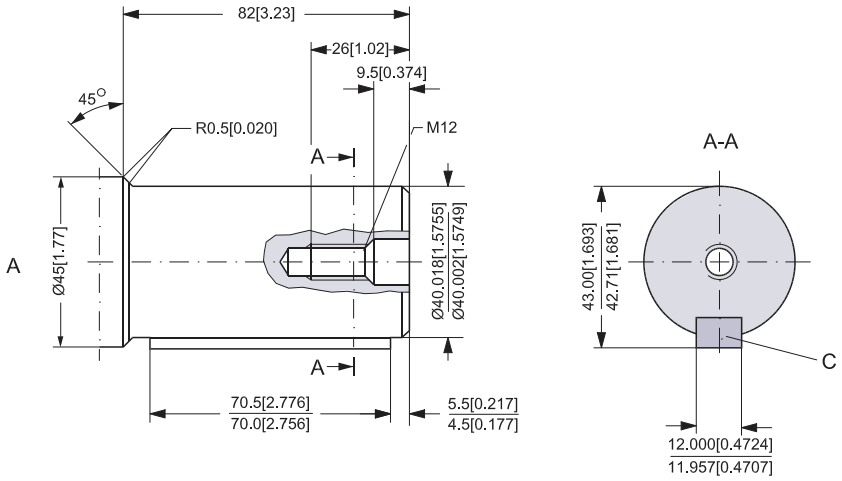

B: Cylindrical 1.5 in shaft
D: Parallel key
$^3/_8 \times {}^3/_8 \times 2^1/_4$ in
B.S. 46
Keyway deviates from standard

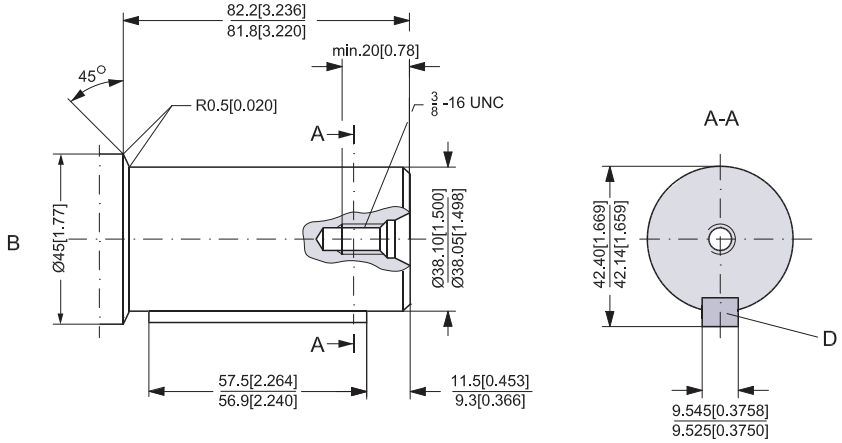

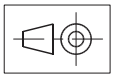

151-1032.10

Shaft Version

C. Involute splined shaft
ANS B92.1 - 1970 standard
Flat root side fit
Pitch 12/24
Teeth 17
Major dia. 1.50 in
Pressure angle 30°

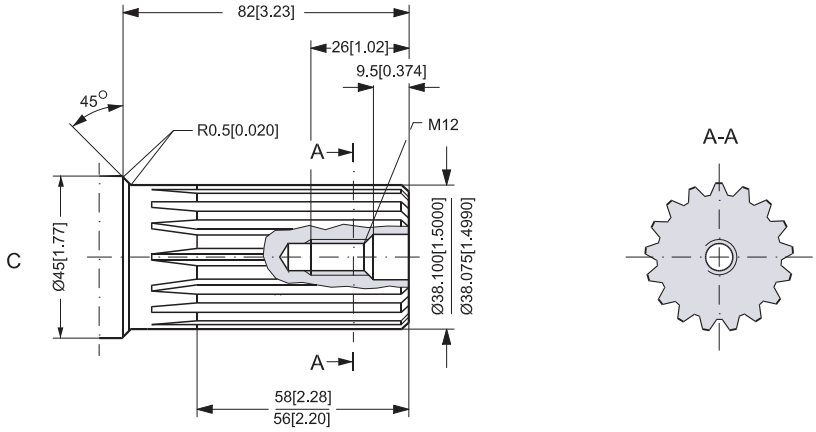

US version

D. Involute splined shaft
ANS B92.1 - 1970 standard
Flat root side fit
Pitch 12/24
Teeth 17
Major dia. 1.50 in
Pressure angle 30°

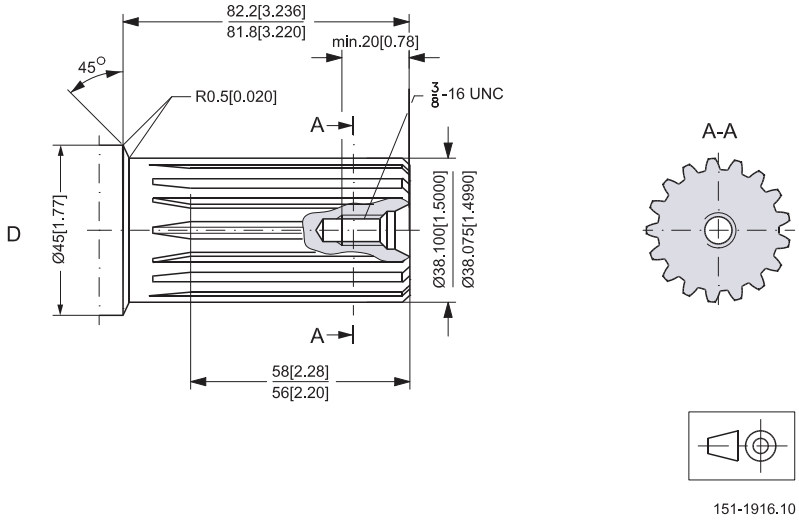

Shaft Version

E: Tapered 45 mm shaft
(ISO/R775)
I: DIN 937
Across flats: 46 mm
Tightening torque:
500 ± 30 Nm [4430 ±270 lbf·in]
H: Taper 1:10
J: Parallel key
B12 × 8 × 28
DIN 6885
Keyway deviates from
standard

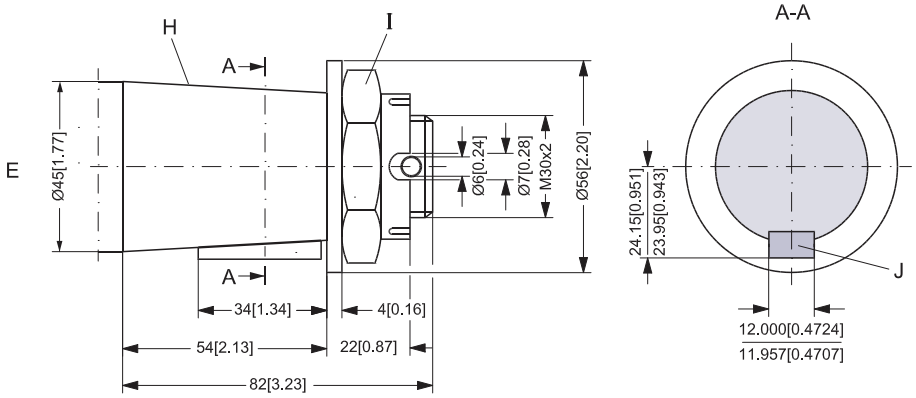

F: Tapered 1.75 in shaft
K: Cone 1:8
SAE J501
L: 1 1/4 - 18 UNEF
Across flats 2 3/16 in
Tightening torque:
500 ±10 Nm (4425 ±90 lbf·in)
M: Parallel key
7/16 × 7/16 × 1 1/4
B.S. 46
Keyway deviates from
standard

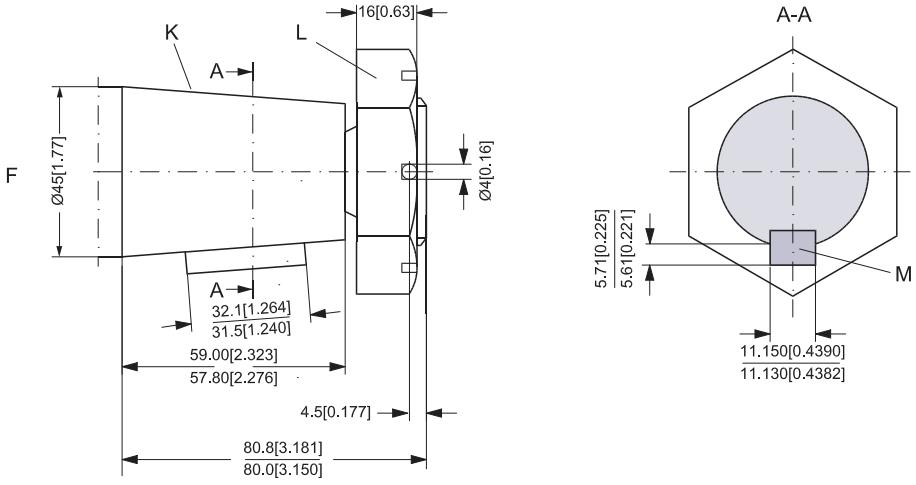

G. P.t.o. shaft
DIN 9611 Form 1
(ISO/R500 without pin hole)

** Deviates from DIN 9611

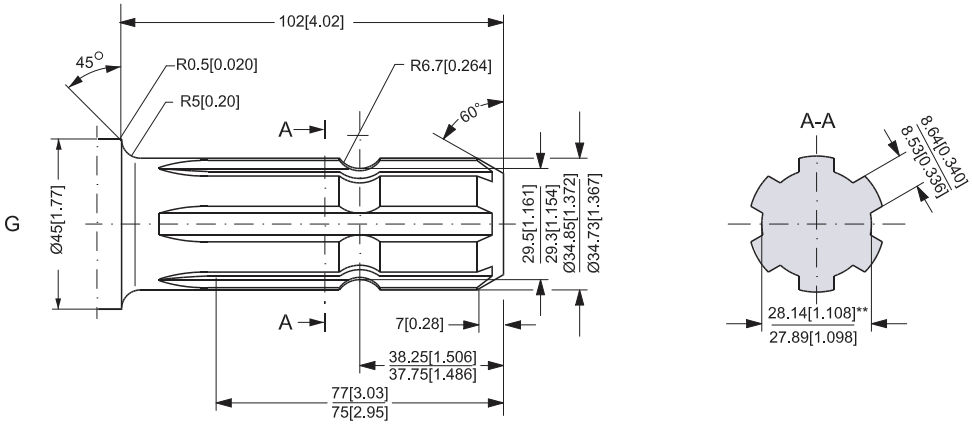

151-1917.10

Port Thread Versions

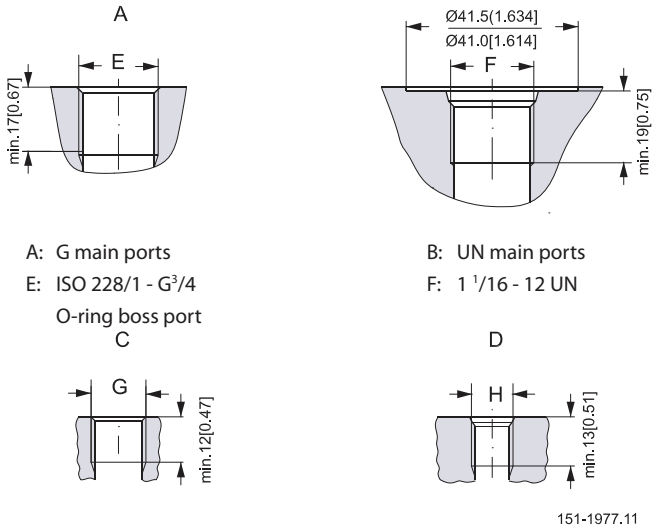

A: G main ports
E: ISO 228/1 - G3/4
O-ring boss port

B: UN main ports
F: 1 1/16 - 12 UN

C: G drain port
G: ISO 228/1 - G1/4
O-ring boss port

D: UNF drain port
H: 9/16 - 18 UNF

Dimensions
Standard Flange

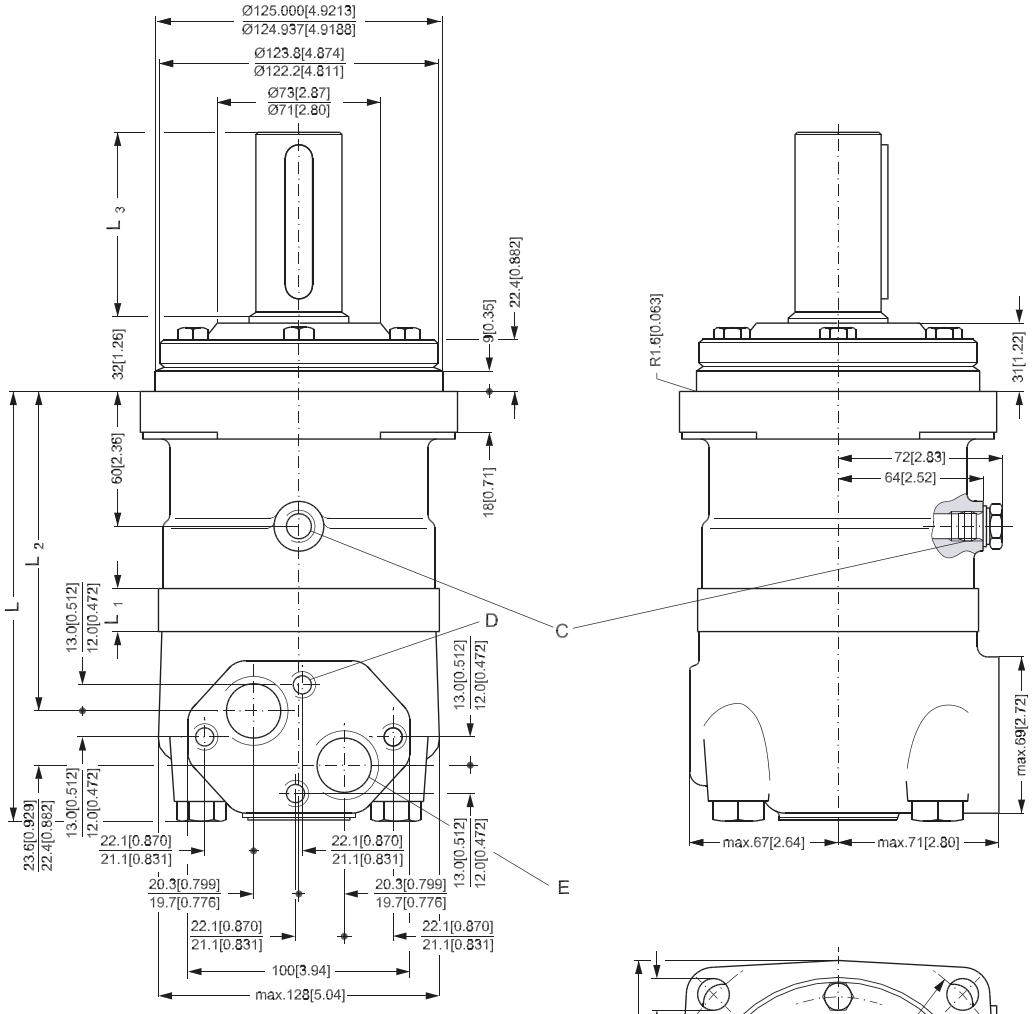

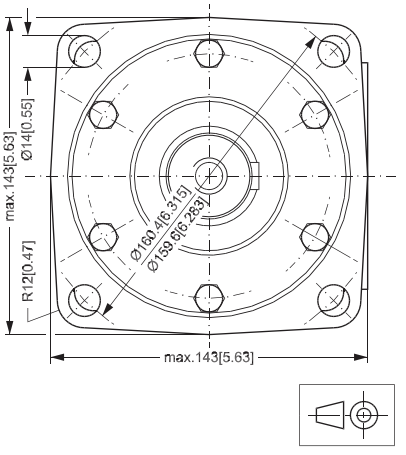

Type	L_{max} mm [in]	L_{1*} mm [in]	L_2 mm [in]
OMT 160	190 [7.48]	16.5 [0.650]	140 [5.51]
OMT 200	195 [7.68]	21.5 [0.846]	145 [5.71]
OMT 250	201 [7.91]	27.8 [1.094]	151 [5.94]
OMT 315	211 [8.31]	37.0 [1.457]	161 [6.34]
OMT 400	221 [8.70]	47.5 [1.870]	171 [6.73]
OMT 500	235 [9.25]	61.5 [2.421]	185 [7.28]

Output shaft		L_3 mm [in]
All shafts except P.t.o. shaft	max.	82 [3.23]
P.t.o. shaft	max.	102 [4.02]

C: Drain connection
G 1/4; 12 mm [0.47 in] deep
D: M10; 10 mm [0.39 in] deep
E: G 3/4; 17 mm [0.67 in] deep

*) The gearwheel set is 3.5 mm [0.138 in] wider across the rollers than the L1 dimensions

Standard Flange

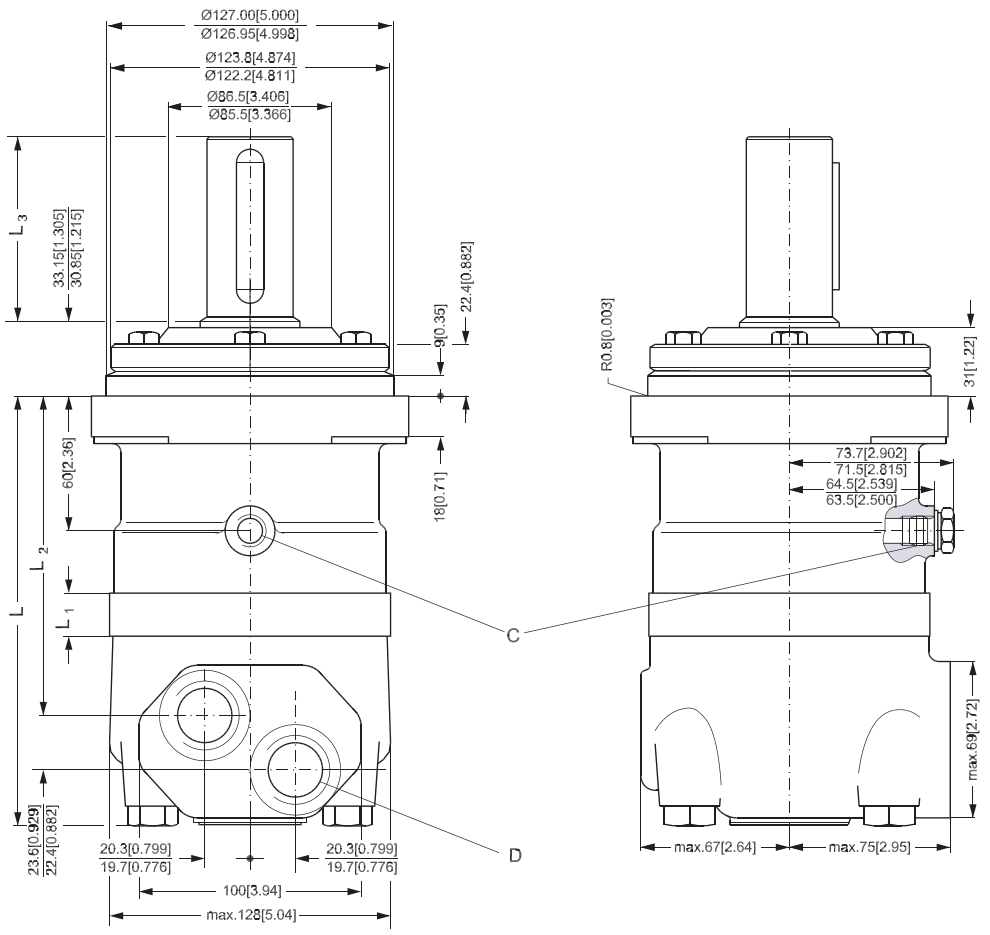

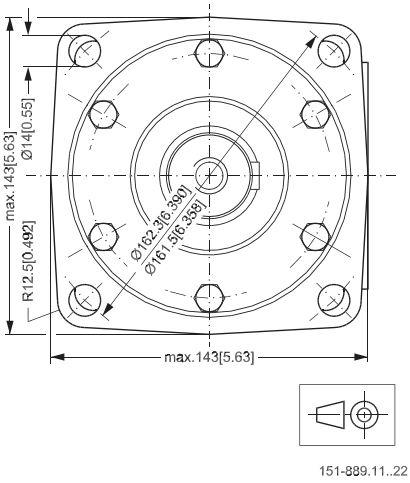

Type	L_{max} mm [in]	L_{1*} mm [in]	L_2 mm [in]
OMT 160	190 [7.48]	16.5 [0.650]	140 [5.51]
OMT 200	195 [7.68]	21.5 [0.846]	145 [5.71]
OMT 250	201 [7.91]	27.8 [1.094]	151 [5.94]
OMT 315	211 [8.31]	37.0 [1.457]	161 [6.34]
OMT 400	221 [8.70]	47.5 [1.870]	171 [6.73]
OMT 500	235 [9.25]	61.5 [2.421]	185 [7.28]

Output shaft	L_3 mm [in]
Cyl. 1.5 in Splined 1.5 in	82 [3.23]
Tapered 1.75 in	80.4 [3.17]

C: Drain connection 9⁄16 - 18 UNF; 13 mm [0.51 in] deep O-ring boss port

D: 1 1⁄16 - 12 UN; 19 mm [0.75 in] deep O-ring boss port

*) The gearwheel set is 3.5 mm [0.138 in] wider across the rollers than the L1 dimensions

Wheel

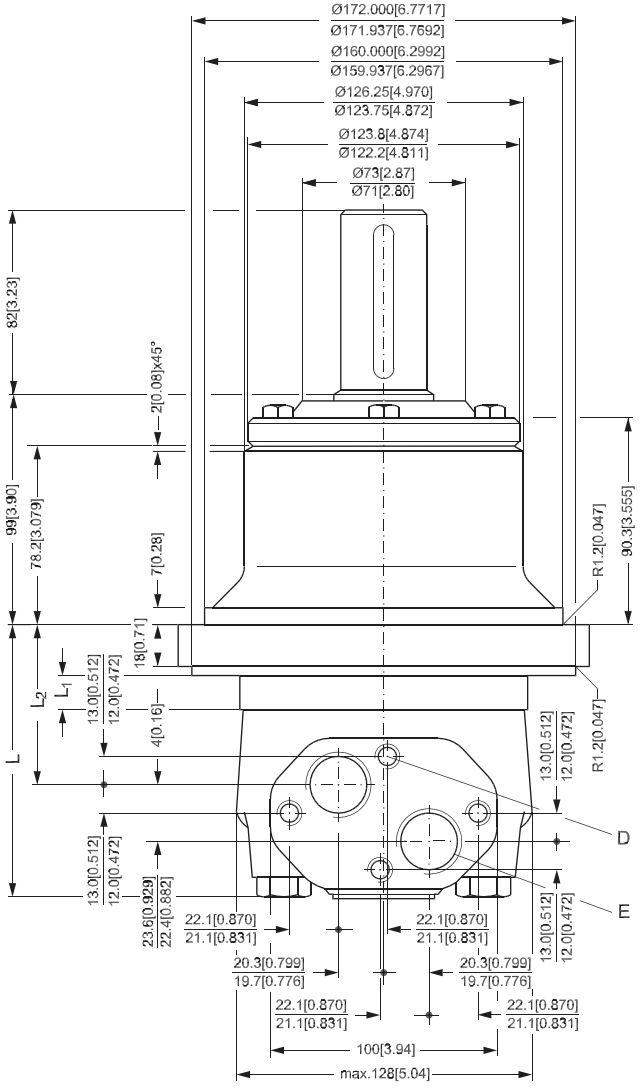

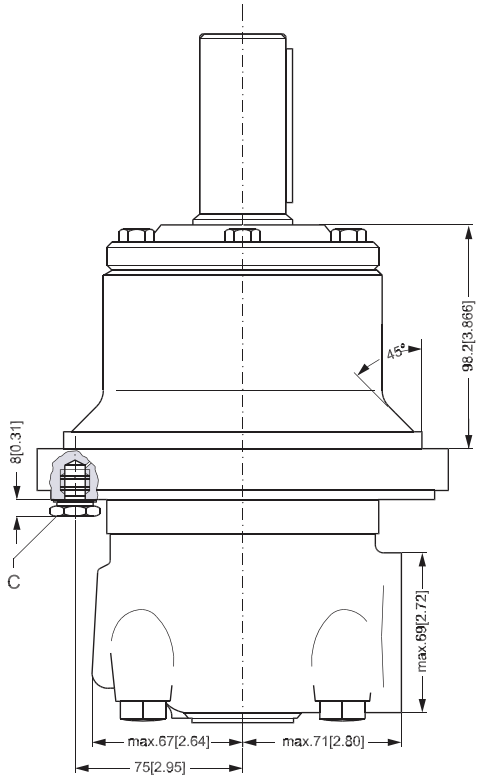

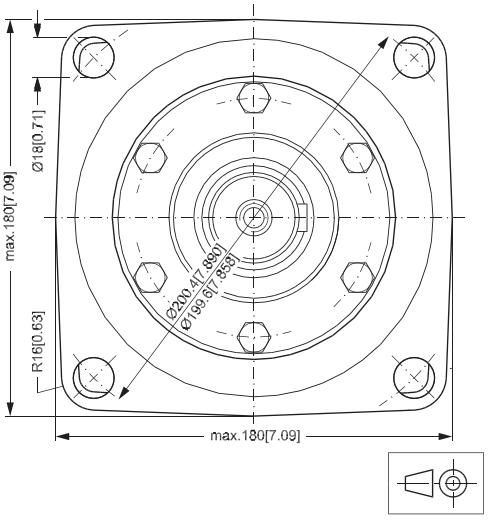

151-897.12

Type	L_{max} mm [in]	L_{1*} mm [in]	L_2 mm [in]
OMTW 160	123 [4.84]	16.5 [0.650]	73 [2.87]
OMTW 200	128 [5.04]	21.5 [0.846]	78 [3.07]
OMTW 250	134 [5.28]	27.8 [1.094]	84 [3.31]
OMTW 315	144 [5.67]	37.0 [1.457]	94 [3.70]
OMTW 400	154 [6.06]	47.5 [1.870]	104 [4.09]
OMTW 500	168 [6.61]	61.5 [2.421]	118 [4.65]

C: Drain connection
G 1/4; 12 mm [0.47 in] deep
D: M10; 10 mm [0.39 in] deep
E: G 3/4; 17 mm [0.67 in] deep

*) The gearwheel set is 3.5 mm [0.138 in] wider across the rollers than the L1 dimensions

Wheel

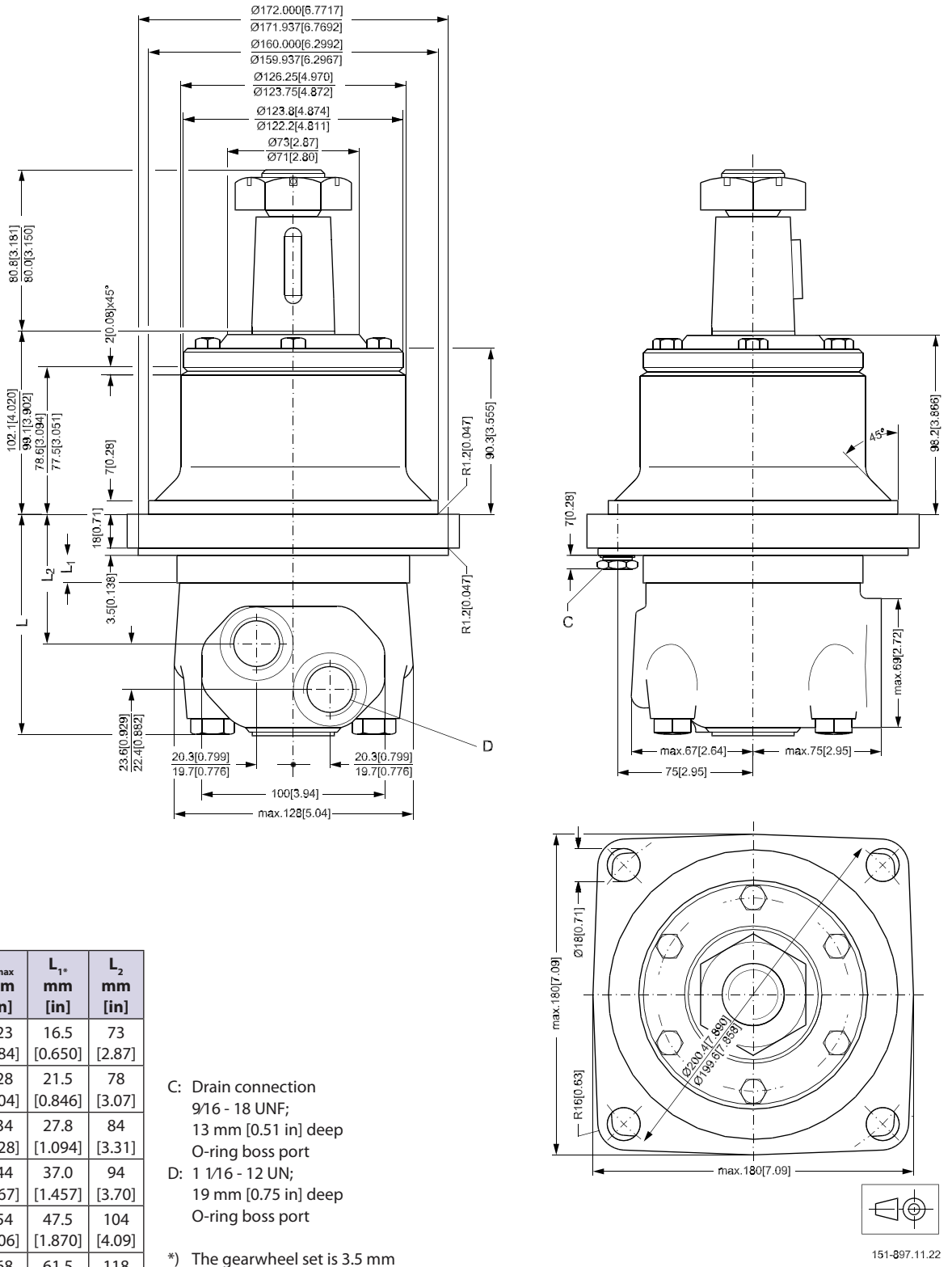

Type	L_{max} mm [in]	L_{1*} mm [in]	L_2 mm [in]
OMTW 160	123 [4.84]	16.5 [0.650]	73 [2.87]
OMTW 200	128 [5.04]	21.5 [0.846]	78 [3.07]
OMTW 250	134 [5.28]	27.8 [1.094]	84 [3.31]
OMTW 315	144 [5.67]	37.0 [1.457]	94 [3.70]
OMTW 400	154 [6.06]	47.5 [1.870]	104 [4.09]
OMTW 500	168 [6.61]	61.5 [2.421]	118 [4.65]

C: Drain connection
9⁄16 - 18 UNF;
13 mm [0.51 in] deep
O-ring boss port

D: 1 1⁄16 - 12 UN;
19 mm [0.75 in] deep
O-ring boss port

*) The gearwheel set is 3.5 mm [0.138 in] wider across the rollers than the L1 dimensions

Brake-Wheel

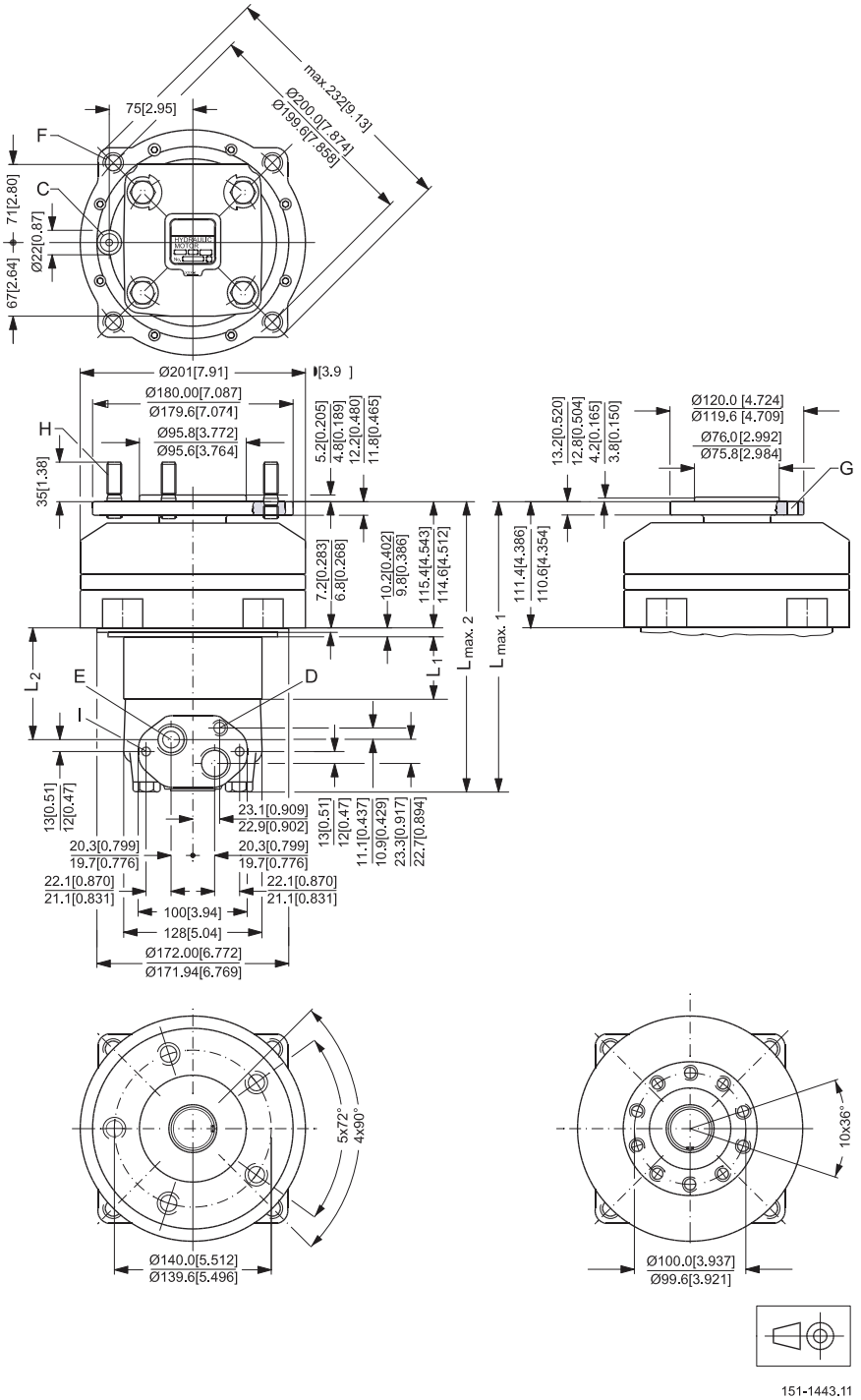

Type	$L_{max\,1}$ mm [in]	$L_{max\,2}$ mm [in]	L_{1*} mm [in]	L_2 mm [in]
OMT 160 FX	223 [8.78]	227 [8.94]	16.5 [0.650]	62 [2.45]
OMT 200 FX	228 [8.98]	232 [9.13]	21.5 [0.846]	67 [2.65]
OMT 250 FX	234 [9.21]	238 [9.37]	27.8 [1.094]	74 [2.89]
OMT 315 FX	243 [9.57]	247 [9.72]	37.0 [1.457]	83 [3.26]
OMT 400 FX	254 [10.00]	258 [10.16]	47.5 [1.870]	93 [3.67]
OMT 500 FX	268 [10.55]	272 [10.71]	61.5 [2.421]	107 [4.22]

C: Brake-release port G 1/4;
12 mm [0.47 in] deep (BS/ISO 228/1)
D: Drain connection G 1/4;
12 mm [0.47 in] deep
E: G 3/4; 17 mm [0.67 in] deep
F: 4 × M12; 27 mm [1.06 in] deep
G: 10 × M12
H: Wheel bolts 5 × M14 × 1.5
I: M10; 10 mm [0.39 in] deep
*) The gearwheel set is 3.5 mm [0.138 in] wider across the rollers than the L1 dimensions

Brake-Standard

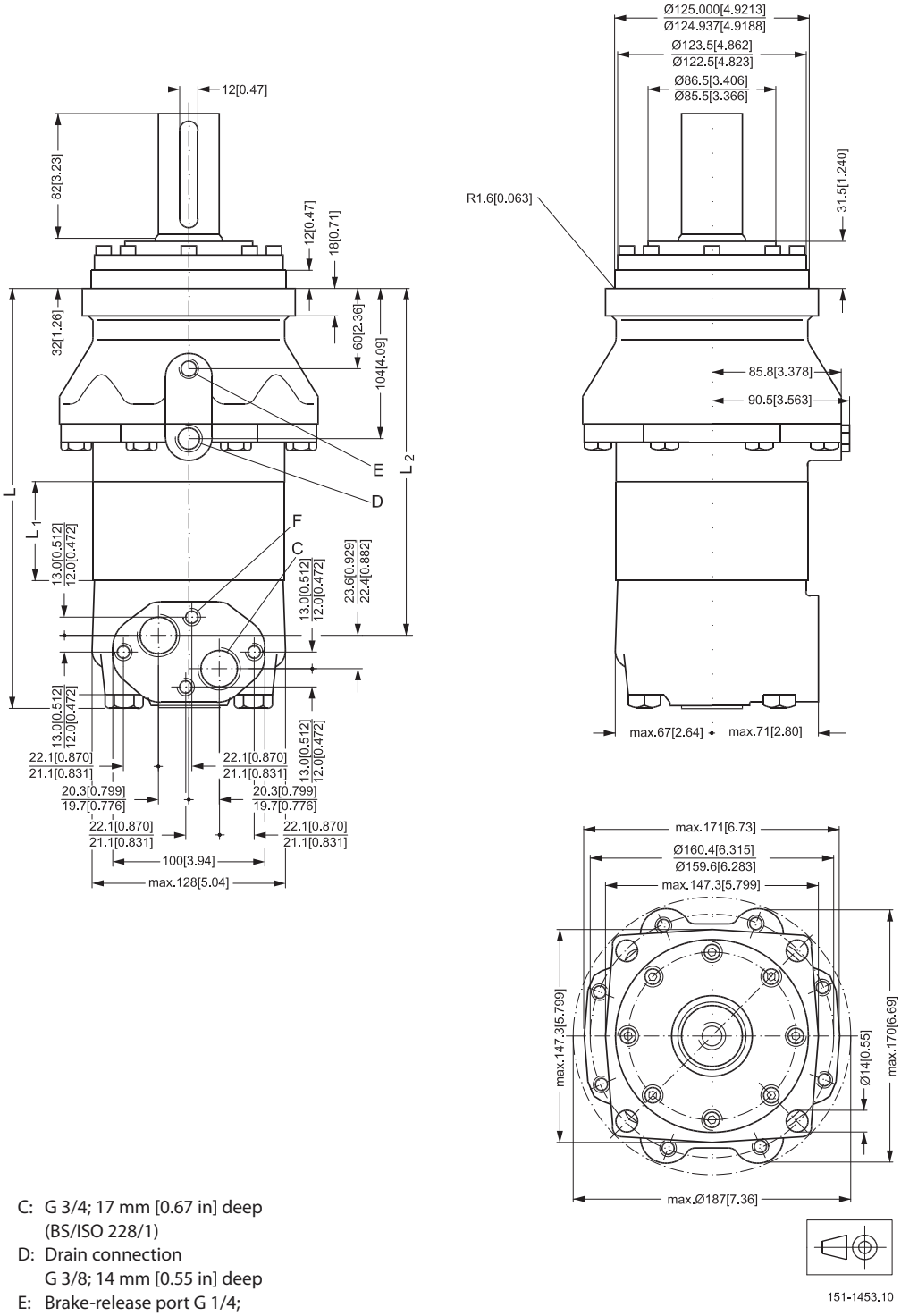

Type	L_{max} mm [in]	L_{1*} mm [in]	L_2 mm [in]
OMT 160 FL/FH	228 [8.98]	16.5 [0.650]	178 [7.01]
OMT 200 FL/FH	233 [9.17]	21.5 [0.846]	183 [7.20]
OMT 250 FL/FH	239 [9.41]	27.8 [1.094]	189 [7.44]
OMT 315 FL/FH	248 [9.76]	37.0 [1.457]	199 [7.83]
OMT 400 FL/FH	259 [10.20]	47.5 [1.870]	209 [8.23]
OMT 500 FL/FH	273 [10.75]	61.5 [2.421]	223 [8.78]

C: G 3/4; 17 mm [0.67 in] deep (BS/ISO 228/1)
D: Drain connection G 3/8; 14 mm [0.55 in] deep
E: Brake-release port G 1/4; 12 mm [0.47 in] deep
F: M10; 10 mm [0.39 in] deep

*) The gearwheel set is 3.5 mm [0.138 in] wider across the rollers than the L1 dimensions

Short

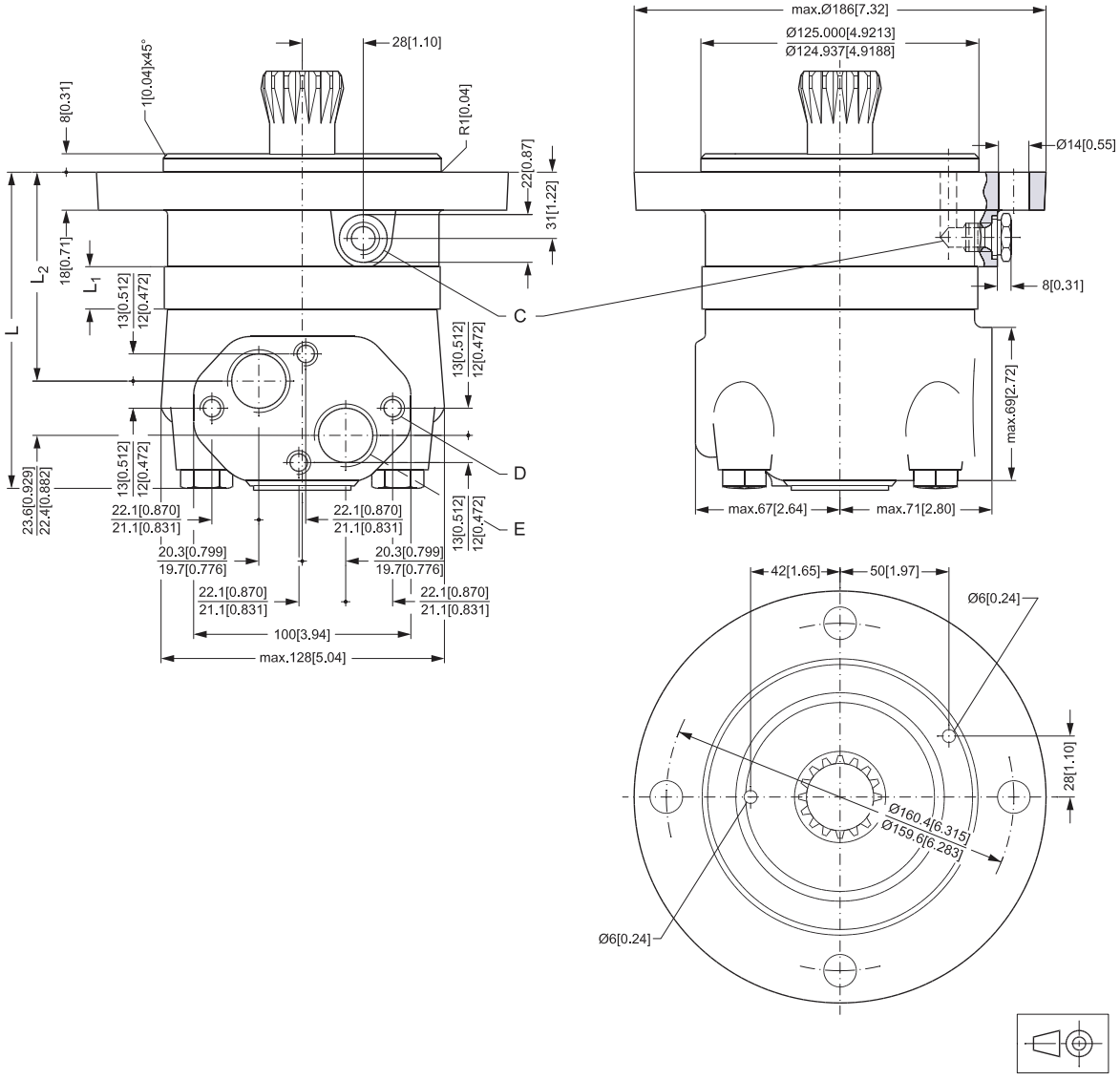

151-898.11

Type	L_{max} mm [in]	L_{1*} mm [in]	L_2 mm [in]
OMTS 160	146 [5.75]	16.5 [0.650]	96 [3.78]
OMTS 200	151 [5.94]	21.5 [0.846]	101 [3.98]
OMTS 250	157 [6.18]	27.8 [1.094]	107 [4.21]
OMTS 315	166 [6.54]	37.0 [1.457]	116 [4.57]
OMTS 400	177 [6.97]	47.5 [1.870]	127 [5.00]
OMTS 500	191 [7.52]	61.5 [2.421]	142 [5.59]

C: Drain connection
G 1/4; 12 mm [0.47 in] deep
D: M10; 10 mm [0.39 in] deep E:
G 3/4; 17 mm [0.67 in] deep

*) The gearwheel set is 3.5 mm [0.138 in] wider across the rollers than the L1 dimensions

Installing the OMTS

The cardan shaft of the OMTS motor acts as an "output shaft". Because of the movement of the shaft, no seal can be fitted at the shaft output.
Internal oil leakage from the motor will therefore flow into the attached component.

During start and operation it is important that the spline connection and the bearings in the attached component receive oil and are adequately lubricated. To ensure that the spline connection receives sufficient oil, a conical sealing ring between the shaft of the attached component and the motor intermediate plate is recommended. This method is used in the OMT.

The conical sealing ring (code. no. 633B9022) is supplied with the motor.

To ensure that oil runs to the bearings and other parts of the attached component, the stop plate must have a hole in it (see fig. below).

We recommend an O-ring between motor and attached component. The O-ring (code no. 151B1040) is supplied with the motor. If motor and attached component have been separated, remember to refill before starting up. Fill the oil through the drain connection.

OMTS Dimensions of the Attached Component

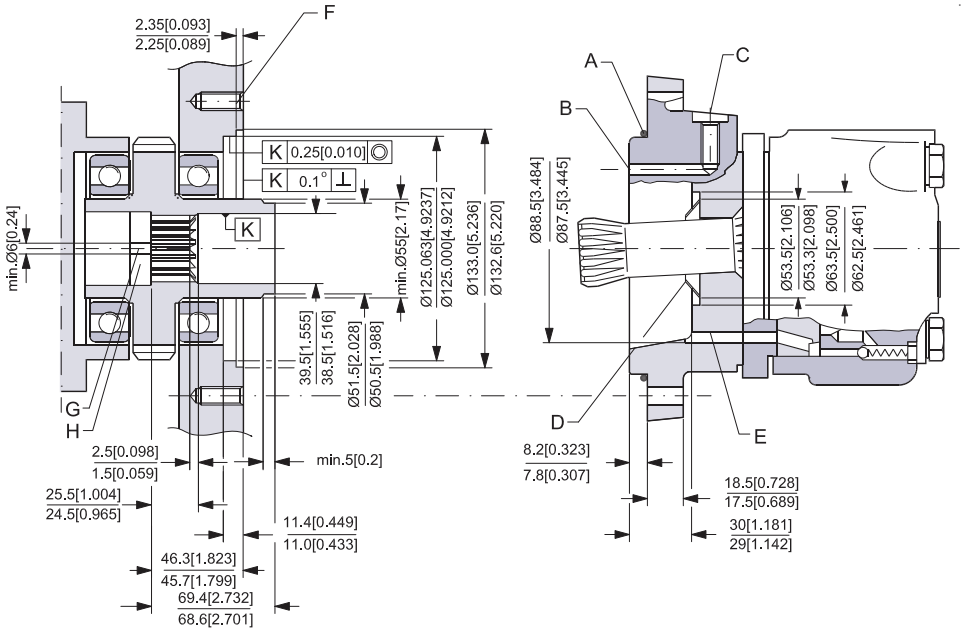

A: O-ring: 125 × 3 mm
B: External drain channel
C: Drain connection
G 1⁄4; 12 mm [0.47 in] deep
D: Conical seal ring
E: Internal drain channel
F: M12; min. 18 mm [0.71 in] deep
G: Oil circulation hole
H: Hardened stop plate

Internal Spline Data for the Component to be Attached

The attached component must have internal splines corresponding to the external splines on the motor cardan shaft (see drawing below).

Material:
Case hardening steel with a tensile strength corresponding at least to 20 MoCr4 (900 N/mm²) or SAE 8620.

Hardening specification:
- On the surface: HV = 750 ± 50
- 0.7 ± 0.2 mm under the surface: HV = 560

Internal involute spline data
Standard ANS B92.1-1970, class 5 (corrected m · X = 1; m = 2.1166)

Flat root side fit		mm	in
Number of teeth	z	16	16
Pitch	DP	12/24	12/24
Pressure angle		30°	30°
Pitch dia.	D	33.8656	1.3333
Major dia.	D_{ri}	$28.0^{+0.4}_{0}$	$1.5118^{+0.0157}_{0}$
Form dia. (min.)	D_{fi}	37.6	1.4803
Minor dia.	D_i	$32.150^{+0.04}_{0}$	$1.2657^{+0.00157}_{0}$
Space width (circular)	L_o	$4.516^{\pm 0.037}$	$0.1777^{\pm 0.0014}$
Tooth thickness (circular)	S_o	2.170	0.0854
Fillet radius	$R_{min.}$	0.5	0.02
Max. measurement between pins*	l	$26.9^{+0.1}_{0}$	$1.059^{+0.004}_{0}$
Pin dia.	d	$4.834^{\pm 0.001}$	$0.1903^{\pm 0.00004}$

* Finished dimensions (when hardened)

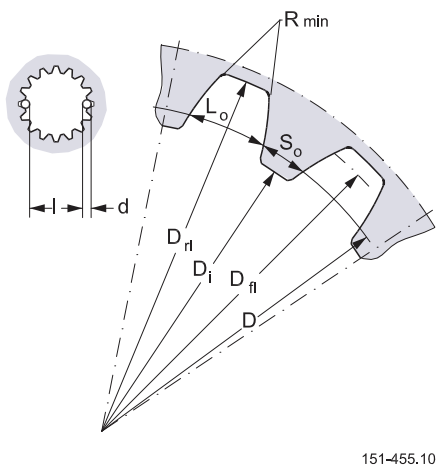

Drain Connection on OMTS or Attached Component

A drain line ought to be used when pressure in the return line can exceed the permissible pressure on the shaft seal of the attached component.

The drain line can be connected at two different points:
1) at the motor drain connection
2) at the drain connection of the attached component.

If a drain line is fitted to the attached component, it must be possible for oil to flow freely between motor and attached component.

The drain line must be led to the tank in such a way that there is no risk of the motor and attached component being drained of oil when at rest.
The maximum pressure in the drain line is limited by the attached component and its shaft seal.

Weight of Motors

Code no	Weight	
	kg	[lb]
151B2050	20.0	44.1
151B2051	20.5	45.2
151B2052	21.0	46.3
151B2053	22.0	48.5
151B2054	23.0	50.7
151B2055	24.0	52.9
151B2056	20.0	44.1
151B2057	20.5	45.2
151B2058	21.0	46.3
151B2059	22.0	48.5
151B2060	23.0	50.7
151B2061	24.0	52.9
151B2062	20.0	44.1
151B2063	20.5	45.2
151B2064	21.0	46.3
151B2065	22.0	48.5
151B2066	23.0	50.7
151B2067	24.0	52.9
151B2080	22.0	48.5
151B2081	22.5	49.6
151B2082	23.0	50.7
151B2083	24.0	52.9
151B2084	25.0	55.1
151B2085	26.0	57.3
151B2150	31.8	70.1
151B2151	32.6	71.9
151B2152	33.5	73.9
151B2153	34.9	76.9
151B2154	36.5	80.5
151B2155	31.8	70.1
151B2156	32.6	71.9
151B2157	33.5	73.9
151B2158	34.9	76.9
151B2159	36.5	80.5
151B2160	31.8	70.1
151B2161	32.6	71.9
151B2162	33.5	73.9
151B2163	34.9	76.9
151B2164	36.5	80.5
151B2170	32.4	71.4
151B2171	33.2	73.2
151B2172	34.1	75.2
151B2173	35.5	78.3
151B2174	37.1	81.8
151B2183	30.0	66.2
151B2184	30.8	67.9
151B2185	31.7	69.9
151B2186	33.1	73.0
151B2187	34.7	76.5
151B2188	30.0	66.2
151B2189	30.8	67.9

Code no	Weight	
	kg	[lb]
151B2190	31.7	69.9
151B2191	33.1	73.0
151B2192	34.7	76.5
151B3000	20.0	44.1
151B3001	20.5	45.2
151B3002	21.0	46.3
151B3003	22.0	48.5
151B3004	23.0	50.7
151B3005	24.0	52.9
151B3006	20.0	44.1
151B3007	20.5	45.2
151B3008	21.0	46.3
151B3009	22.0	48.5
151B3010	23.0	50.7
151B3011	24.0	52.9
151B3012	20.0	44.1
151B3013	20.5	45.2
151B3014	21.0	46.3
151B3015	22.0	48.5
151B3016	23.0	50.7
151B3017	24.0	52.9
151B3018	20.0	44.1
151B3019	20.5	45.2
151B3020	21.0	46.3
151B3021	22.0	48.5
151B3022	23.0	50.7
151B3023	24.0	52.9
151B3024	22.0	48.5
151B3025	22.5	49.6
151B3026	23.0	50.7
151B3027	24.0	52.9
151B3028	25.0	55.1
151B3029	26.0	57.3
151B3030	22.0	48.5
151B3031	22.5	49.6
151B3032	23.0	50.7
151B3033	24.0	52.9
151B3034	25.0	55.1
151B3035	26.0	57.3
151B3036	15.0	33.1
151B3037	15.5	34.2
151B3038	16.0	35.3
151B3039	17.0	37.5
151B3040	18.0	39.7
151B3041	19.0	41.9
151B3100	31.8	70.1
151B3101	32.6	71.9
151B3102	33.5	73.9
151B3103	34.9	76.9
151B3104	36.5	80.5
151B3105	31.8	70.1

Code no	Weight	
	kg	[lb]
151B3106	32.6	71.9
151B3107	33.5	73.9
151B3108	34.9	76.9
151B3109	36.5	80.5
151B3110	31.8	70.1
151B3111	32.6	71.9
151B3112	33.5	73.9
151B3113	34.9	76.9
151B3114	36.5	80.5
151B3115	32.4	71.4
151B3116	33.2	73.2
151B3117	34.1	75.2
151B3118	35.5	78.3
151B3119	37.1	81.8
151B3120	32.4	71.4
151B3121	33.2	73.2
151B3122	34.1	75.2
151B3123	35.5	78.3
151B3124	37.1	81.8
151B3125	22.7	50.1
151B3126	23.5	51.8
151B3127	24.4	53.8
151B3128	25.6	56.4
151B3129	27.7	61.1
151B3200	31.0	68.3
151B3201	31.5	69.4
151B3202	32.0	70.5
151B3203	33.0	72.8
151B3204	34.0	75.0
151B3205	35.0	77.2
151B3207	31.0	68.3
151B3208	31.5	69.4
151B3209	32.0	70.5
151B3210	33.0	72.8
151B3211	34.0	75.0
151B3212	35.0	77.2
151B4000	24.5	54.0
151B4001	25.0	55.1
151B4002	25.5	56.2
151B4003	26.5	58.4
151B4004	27.5	60.6
151B4005	28.5	62.8
151B4007	24.5	54.0
151B4008	25.0	55.1
151B4009	25.5	56.2
151B4010	26.5	58.4
151B4011	27.5	60.6
151B4012	28.5	62.8
151B4021	24.5	54.0
151B4022	25.0	55.1
151B4023	25.5	56.2

Weight of Motors

Code no	Weight	
	kg	[lb]
151B4024	26.5	58.4
151B4025	27.5	60.6
151B4026	28.5	62.8
151B4028	24.5	54.0
151B4029	25.0	55.1
151B4030	25.5	56.2
151B4031	26.5	58.4
151B4032	27.5	60.6
151B4033	28.5	62.8
151F0500	9.8	21.6
151F0501	10.0	22.1
151F0502	10.3	22.7
151F0503	10.7	23.6
151F0504	11.1	24.5
151F0505	11.6	25.6
151F0506	12.3	27.1
151F0507	9.8	21.6
151F0508	10.0	22.1
151F0509	10.3	22.7
151F0510	10.7	23.6
151F0511	11.1	24.5
151F0512	11.6	25.6
151F0513	12.3	27.1
151F0514	9.8	21.6
151F0515	10.0	22.1
151F0516	10.3	22.7
151F0517	10.7	23.6
151F0518	11.1	24.5
151F0519	11.6	25.6
151F0520	12.3	27.1
151F0521	10.3	22.7
151F0522	10.5	23.1
151F0523	10.8	23.8
151F0524	11.2	24.7
151F0525	11.6	25.6
151F0526	12.1	26.7
151F0527	12.8	28.2
151F0528	10.3	22.7
151F0529	10.5	23.1
151F0530	10.8	23.8
151F0531	11.2	24.7
151F0532	11.6	25.6
151F0533	12.1	26.7
151F0534	12.8	28.2
151F0535	7.8	17.2
151F0536	8.0	17.6
151F0537	8.3	18.3
151F0538	8.7	19.2
151F0539	9.1	20.1
151F0540	9.6	21.2
151F0541	10.3	22.7

Code no	Weight	
	kg	[lb]
151F0542	10.2	22.5
151F0543	10.4	22.9
151F0544	10.7	23.6
151F0545	11.1	24.5
151F0546	11.5	25.4
151F0547	12.0	26.5
151F0548	12.7	28.0
151F0560	9.8	21.6
151F0561	10.0	22.1
151F0562	10.3	22.7
151F0563	10.7	23.6
151F0564	11.1	24.5
151F0565	11.6	25.6
151F0566	12.3	27.1
151F0605	13.1	28.9
151F0608	11.1	24.5
151F0609	13.6	30.0
151F0610	13.6	30.0
151F2200	9.8	21.6
151F2201	10.0	22.1
151F2202	10.3	22.7
151F2203	10.7	23.6
151F2204	11.1	24.5
151F2205	11.6	25.6
151F2206	12.3	27.1
151F2207	9.8	21.6
151F2208	10.0	22.1
151F2209	10.3	22.7
151F2210	10.7	23.6
151F2211	11.1	24.5
151F2212	11.6	25.6
151F2213	12.3	27.1
151F2214	9.8	21.6
151F2215	10.0	22.1
151F2216	10.3	22.7
151F2217	10.7	23.6
151F2218	11.1	24.5
151F2219	11.6	25.6
151F2220	12.3	27.1
151F2235	10.3	22.7
151F2236	10.5	23.1
151F2237	10.8	23.8
151F2238	11.2	24.7
151F2239	11.6	25.6
151F2240	12.1	26.7
151F2241	12.8	28.2
151F2242	10.3	22.7
151F2243	10.5	23.1
151F2244	10.8	23.8
151F2245	11.2	24.7
151F2246	11.6	25.6

Code no	Weight	
	kg	[lb]
151F2247	12.1	26.7
151F2248	12.8	28.2
151F2261	13.1	28.9
151F2262	13.1	28.9
151F2263	13.6	30.0
151F2264	13.1	28.9
151F2265	13.6	30.0
151F2300	9.8	21.6
151F2301	10.0	22.1
151F2302	10.3	22.7
151F2303	10.7	23.6
151F2304	11.1	24.5
151F2305	11.6	25.6
151F2306	12.3	27.1
151F2307	13.1	28.9
151F2308	9.8	21.6
151F2309	10.0	22.1
151F2310	10.3	22.7
151F2311	10.7	23.6
151F2312	11.1	24.5
151F2313	11.6	25.6
151F2314	12.3	27.1
151F2315	13.1	28.9
151F2316	9.8	21.6
151F2317	10.0	22.1
151F2318	10.3	22.7
151F2319	10.7	23.6
151F2320	11.1	24.5
151F2321	11.6	25.6
151F2322	12.3	27.1
151F2323	13.1	28.9
151F2324	9.8	21.6
151F2325	10.0	22.1
151F2326	10.3	22.7
151F2327	10.7	23.6
151F2328	11.1	24.5
151F2329	11.6	25.6
151F2330	12.3	27.1
151F2331	13.1	28.9
151F2332	9.8	21.6
151F2333	10.0	22.1
151F2334	10.3	22.7
151F2335	10.7	23.6
151F2336	11.1	24.5
151F2337	11.6	25.6
151F2338	12.3	27.1
151F2339	13.1	28.9
151F2345	14.0	30.9
151F2346	14.0	30.9
151F2347	14.0	30.9
151F2348	14.0	30.9

Weight of Motors

Code no	Weight	
	kg	[lb]
151F2349	14.0	30.9
151F2350	9.8	21.6
151F2351	10.0	22.1
151F2352	10.3	22.7
151F2353	10.7	23.6
151F2354	11.1	24.5
151F2355	11.6	25.6
151F2356	12.3	27.1
151F2357	13.1	28.9
151F2358	14.0	30.9
151F2359	9.8	21.6
151F2360	10.0	22.1
151F2361	10.3	22.7
151F2362	10.7	23.6

Code no	Weight	
	kg	[lb]
151F2363	11.1	24.5
151F2364	11.6	25.6
151F2365	12.3	27.1
151F2366	13.1	28.9
151F2367	14.0	30.9
151F2368	9.8	21.6
151F2369	10.0	22.1
151F2370	10.3	22.7
151F2371	10.7	23.6
151F2372	11.1	24.5
151F2373	11.6	25.6
151F2374	12.3	27.1
151F2375	13.1	28.9
151F2376	14.0	30.9

Code no	Weight	
	kg	[lb]
151F2395	9.8	21.6
151F2396	10.0	22.1
151F2397	10.3	22.7
151F2398	10.7	23.6
151F2399	11.1	24.5
151F2400	11.6	25.6
151F2401	12.3	27.1
151F2402	13.1	28.9
151F2403	14.0	30.9
151F2413	9.8	21.6
151F2414	10.0	22.1
151F2415	10.3	22.7
151F2416	10.7	23.6
151F2417	11.1	24.5

Products we offer:

- Bent Axis Motors
- Closed Circuit Axial Piston Pumps and Motors
- Displays
- Electrohydraulic Power Steering
- Electrohydraulics
- Hydraulic Power Steering
- Integrated Systems
- Joysticks and Control Handles
- Microcontrollers and Software
- Open Circuit Axial Piston Pumps
- Orbital Motors
- PLUS+1™ GUIDE
- Proportional Valves
- Sensors
- Steering
- Transit Mixer Drives

Members of the Sauer-Danfoss Group:

Comatrol
www.comatrol.com

Schwarzmüller-Inverter
www.schwarzmueller-inverter.com

Turolla
www.turollaocg.com

Hydro-Gear
www.hydro-gear.com

Sauer-Danfoss-Daikin
www.sauer-danfoss-daikin.com

520L0407 • Rev EF • Nov 2010

Sauer-Danfoss is a global manufacturer and supplier of high-quality hydraulic and electronic components. We specialize in providing state-of-the-art technology and solutions that excel in the harsh operating conditions of the mobile off-highway market. Building on our extensive applications expertise, we work closely with our customers to ensure exceptional performance for a broad range of off-highway vehicles.

We help OEMs around the world speed up system development, reduce costs and bring vehicles to market faster.
Sauer-Danfoss – Your Strongest Partner in Mobile Hydraulics.

Go to www.sauer-danfoss.com for further product information.

Wherever off-highway vehicles are at work, so is Sauer-Danfoss.

We offer expert worldwide support for our customers, ensuring the best possible solutions for outstanding performance. And with an extensive network of Global Service Partners, we also provide comprehensive global service for all of our components.

Please contact the Sauer-Danfoss representative nearest you.

Local address:

Sauer-Danfoss (US) Company
2800 East 13th Street
Ames, IA 50010, USA
Phone: +1 515 239 6000
Fax: +1 515 239 6618

Sauer-Danfoss ApS
DK-6430 Nordborg, Denmark
Phone: +45 7488 4444
Fax: +45 7488 4400

Sauer-Danfoss GmbH & Co. OHG
Postfach 2460, D-24531 Neumünster
Krokamp 35, D-24539 Neumünster, Germany
Phone: +49 4321 871 0
Fax: +49 4321 871 122

Sauer-Danfoss-Daikin LTD.
Shin-Osaka TERASAKI 3rd Bldg. 6F
1-5-28 Nishimiyahara, Yodogawa-ku
Osaka 532-0004, Japan
Phone: +81 6 6395 6066
Fax: +81 6 6395 8585

www.sauer-danfoss.com